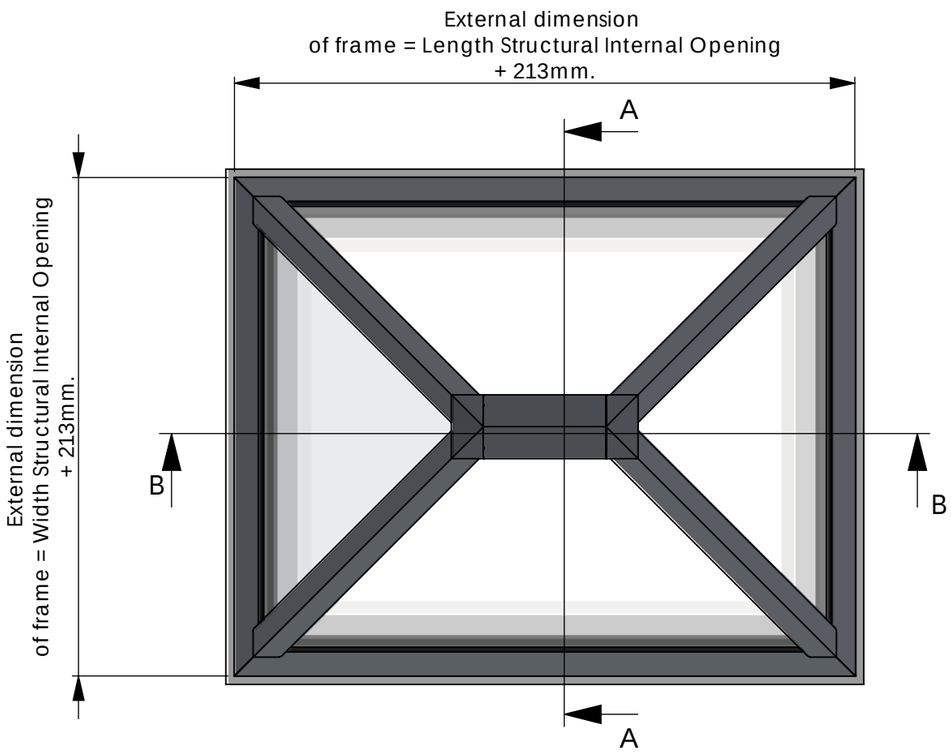

TOP VIEW

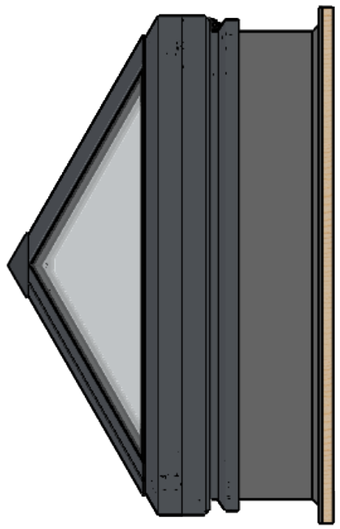

SIDE VIEW

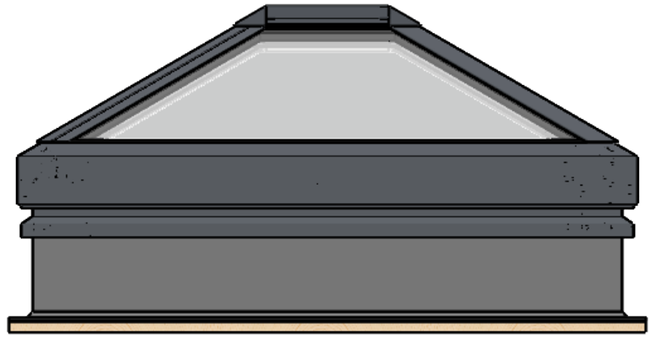

FRONT VIEW

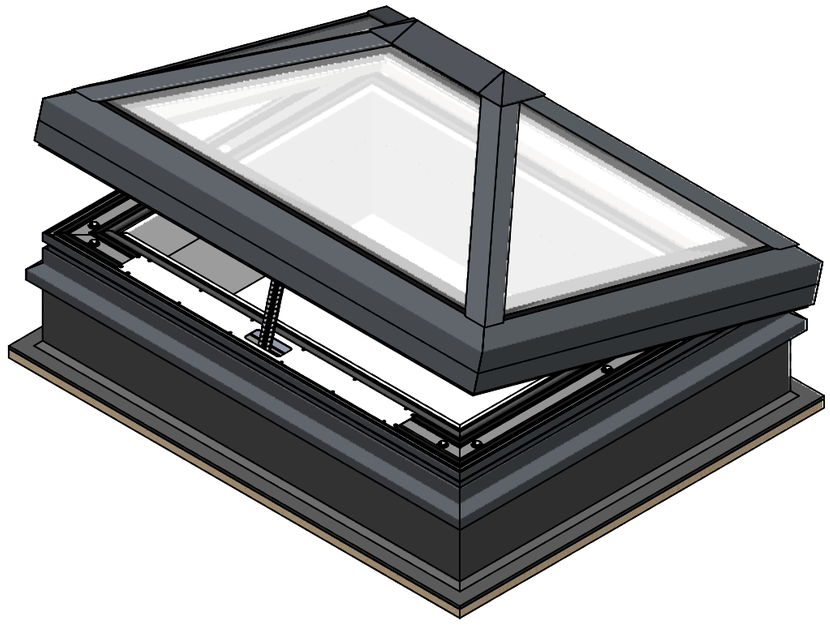

ISOMETRIC VIEW

Customer
-

Title
Pyramid 30 Elongated Elec. Vent.

Date
16/11/2018

Drawn By
WK

Revision
A

Project
STD-1506-001 (I)

É 2014 This drawing remains the property of Sunsquare Limited and must not be copied or passed to a third party without written permission.

Sunsquare Limited
Unit D1 Drinkstone Investment Park
Kempson Way
Bury St Edmunds
Suffolk IP32 7AR
0845 226 3172

sunsquare.co.uk

ITEM NO.	DESCRIPTION
1	Glazing frame constructed from extruded aluminium profile thermally broken with polyamide insulation sections. Internal section PPC RAL 9010 (white) & external section PPC RAL 7015 (Slate Grey) or PPC RAL 9005 (Jet Black).
2	Ridge profile constructed from extruded aluminium profile thermally broken with polyamide insulation sections. Internal section PPC RAL 9010 (white) & external section PPC RAL 7015 (Slate Grey) or PPC RAL 9005 (Jet Black).
3	75mm upstand comprising of: plywood with semi rigid insulating foam core - 12mm internal face, 18mm external face, 25mm top & bottom. (Optional)
4	Double glazed unit with laminated inner pane.
5	24V actuator, 250mm stroke.

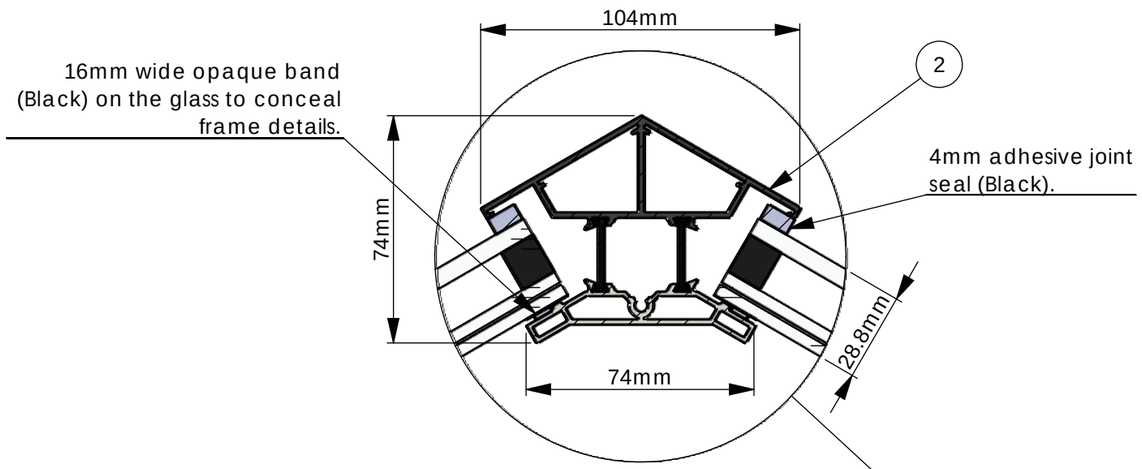

DETAIL C
RIDGE SECTION

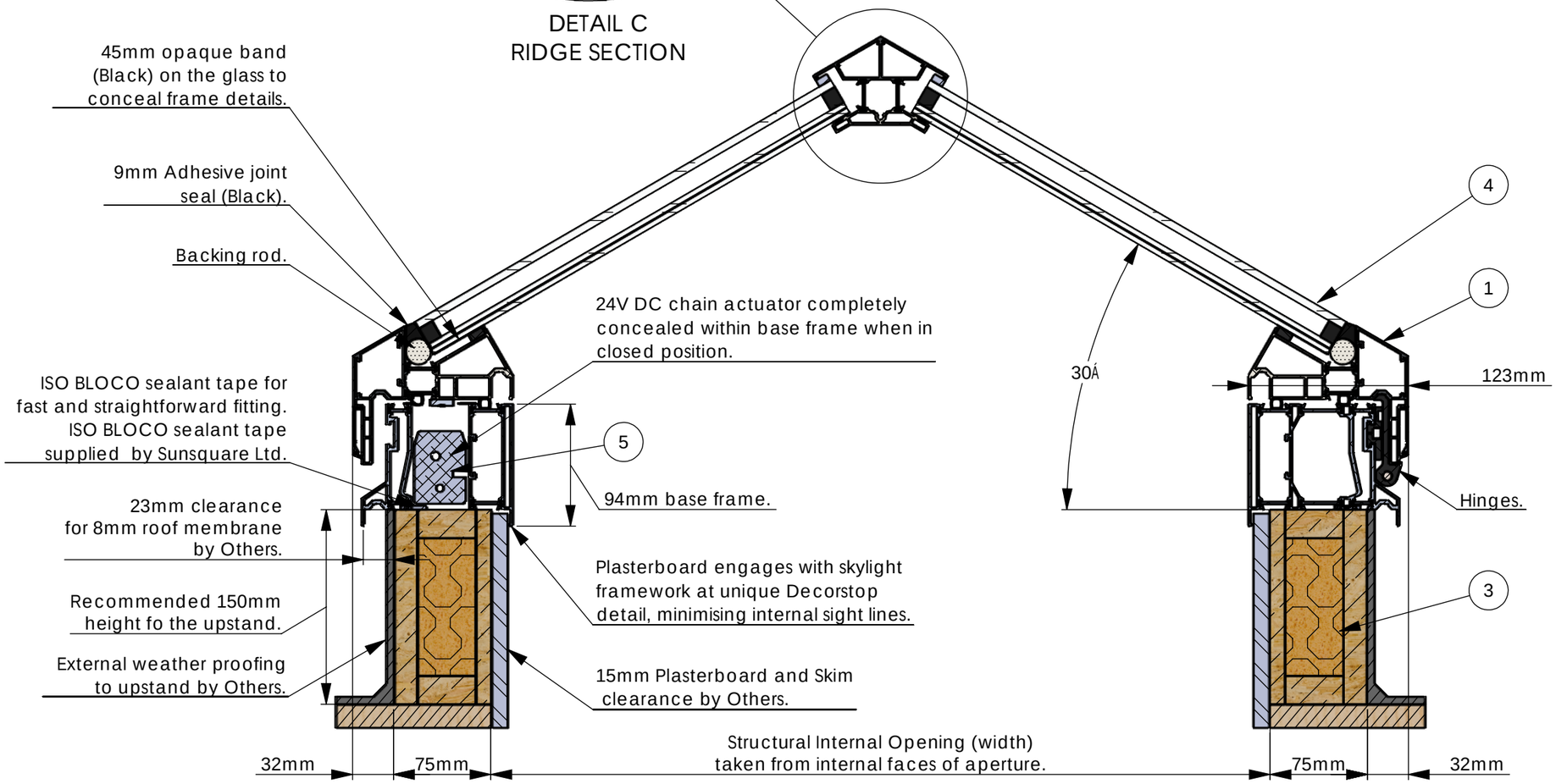

SECTION A-A

REVISIONS		
REV.	DESCRIPTION	DATE
A	Added a note about external roof membrane.	05/03/2019

Customer
-

Title
Pyramid 30 Elongated Elec. Vent.

Date
16/11/2018

Drawn By
WK

Revision
A

Project
STD-1506-002 (I)

É 2014 This drawing remains the property of Sunsquare Limited and must not be copied or passed to a third party without written permission.

Sunsquare Limited
Unit D1 Drinkstone Investment Park
Kempson Way
Bury St Edmunds
Suffolk IP32 7AR
0845 226 3172

sunsquare.co.uk

Note:
Minimum dimension between length and width must be100mm.

ITEM NO.	DESCRIPTION
1	Glazing frame constructed from extruded aluminium profile thermally broken with polyamide insulation sections. Internal section PPC RAL 9010 (white) & external section PPC RAL 7015 (Slate Grey) or PPC RAL 9005 (Jet Black).
2	Ridge profile constructed from extruded aluminium profile thermally broken with polyamide insulation sections. Internal section PPC RAL 9010 (white) & external section PPC RAL 7015 (Slate Grey) or PPC RAL 9005 (Jet Black).
3	75mm upstand comprising of: plywood with semi rigid insulating foam core - 12mm internal face, 18mm external face, 25mm top & bottom.
4	Double glazed unit including laminated inner pane.
5	M8x120 coach screws with torx screwdriver bit T40 supplied by Sunsquare Ltd.

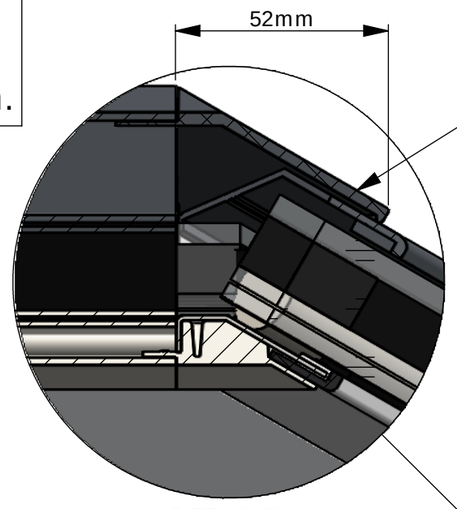

DETAIL E
END CAP DETAIL

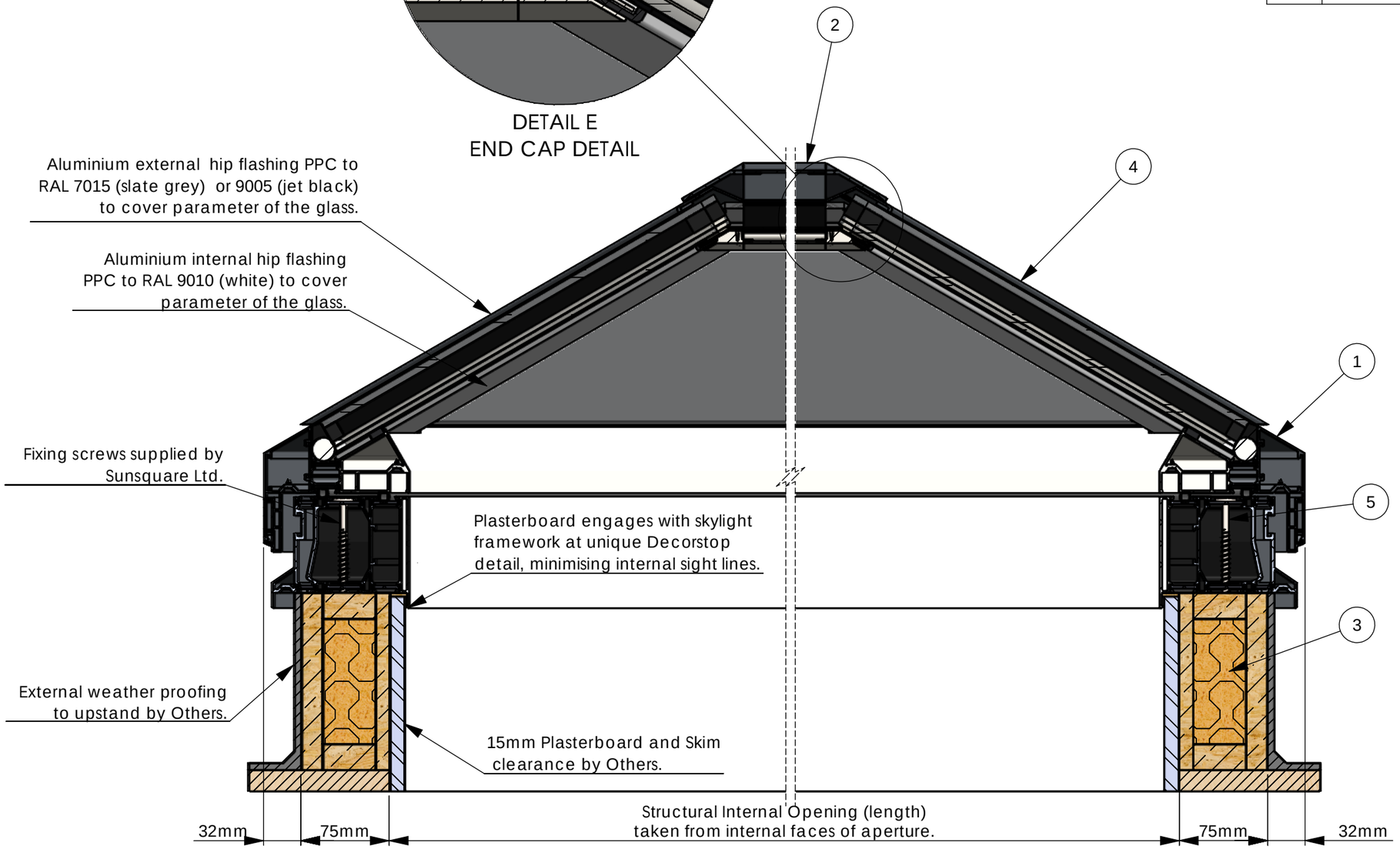

SECTION B-B

REVISIONS		
REV.	DESCRIPTION	DATE
A	Added a note about external roof membrane.	05/03/2019

Customer
-

Title
Pyramid 30 Elongated Elec. Vent.

Date
16/11/2018

Drawn By
WK

Revision
A

Project
STD-1506-003 (I)

É 2014 This drawing remains the property of Sunsquare Limited and must not be copied or passed to a third party without written permission.

Sunsquare Limited
Unit D1 Drinkstone Investment Park
Kempson Way
Bury St Edmunds
Suffolk IP32 7AR
0845 226 3172

sunsquare.co.uk

NOTE:
Only connect the Skylight Actuator as described in the AEV Brochure wiring instruction supplied

Ridge profile constructed from extruded aluminium profile thermally broken with polyamide insulation sections. Internal section PPC RAL 9010 (white) & external section PPC RAL 7015 (Slate Grey) or PPC RAL 9005 (Jet Black).

End cap fully bonded with ridge section.

Glazing frame constructed from extruded aluminium profile thermally broken with polyamide insulation sections. Internal section PPC RAL 9010 (white) & external section PPC RAL 7015 (Slate Grey) or PPC RAL 9005 (Jet Black).

Aluminium external hip flashing PPC to RAL 7015 (slate grey) or 9005 (jet black) to cover parameter of the glass.

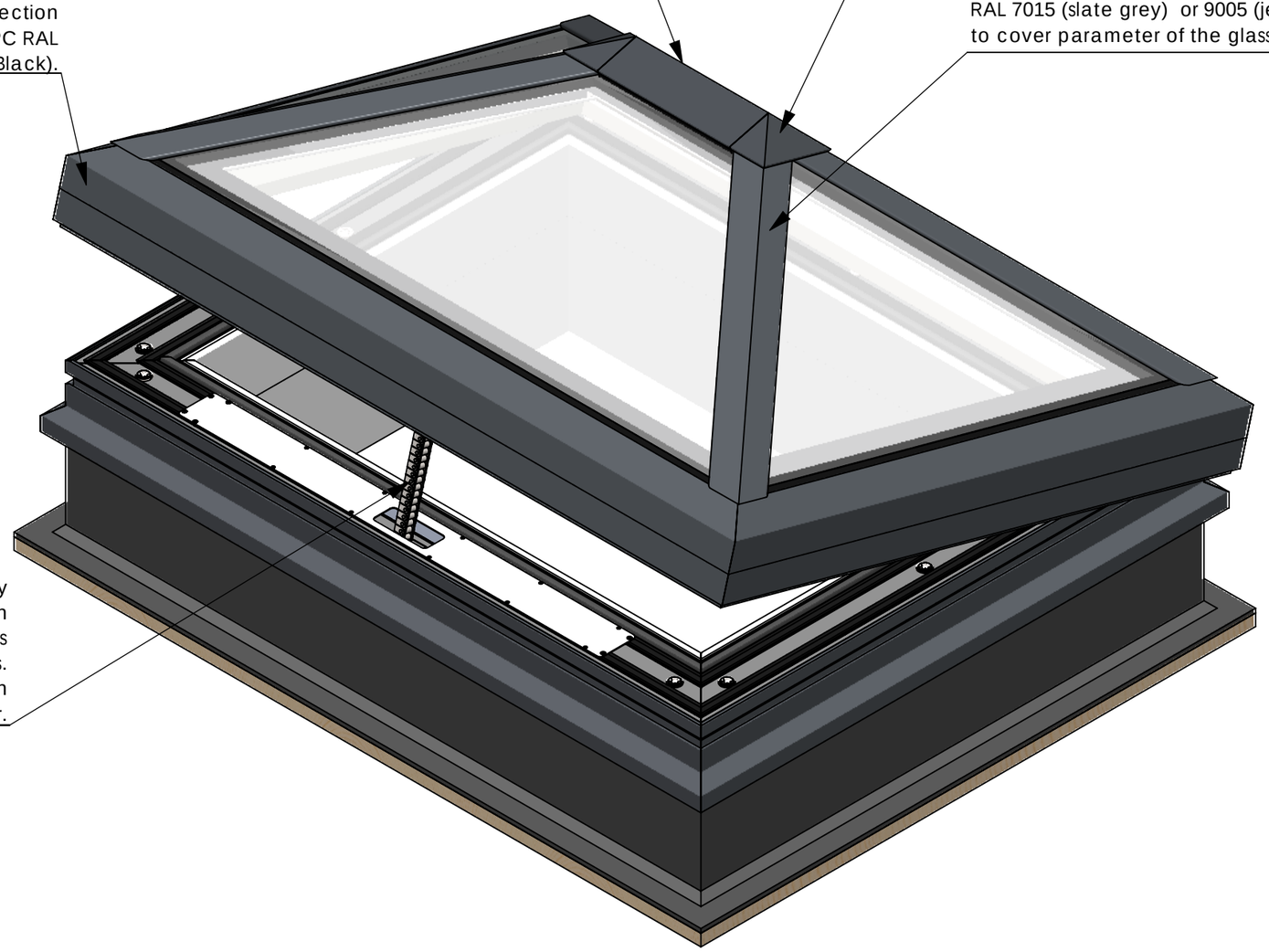

24V DC chain actuator completely concealed within base frame when in closed position. For large units multiplesynchronized actuators. 250mm of overall movement of chain actuator.

ISOMETRIC VIEW
IN OPEN POSITION

REVISIONS		
REV.	DESCRIPTION	DATE
A	Note statment amended.	05/03/2019

Customer
-

Title
Pyramid 30 Elongated Elec. Vent.

Date
16/11/2018

Drawn By
WK

Revision
A

Project
STD-1506-004 (I)

É 2014 This drawing remains the property of Sunsquare Limited and must not be copied or passed to a third party without written permission.

Sunsquare Limited
Unit D1 Drinkstone Investment Park
Kempson Way
Bury St Edmunds
Suffolk IP32 7AR
0845 226 3172

sunsquare.co.uk

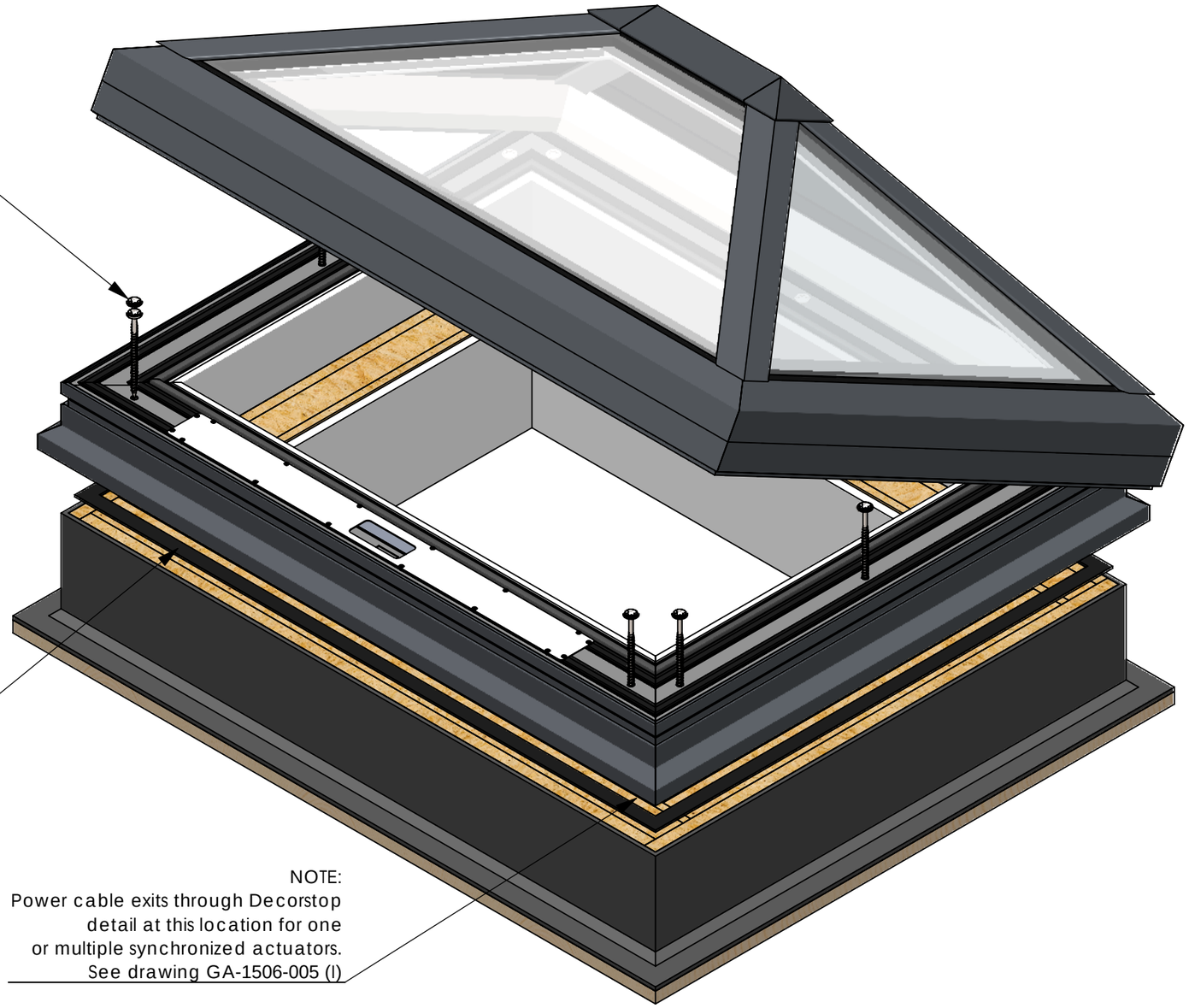

CAUTION: DO NOT OVERTIGHTEN SCREWS.

ISO BLOCO tape: A pre-compressed joint sealant tape for protection against wind drift, as well as providing both thermal and acoustic insulation while remaining permanently elastic to accommodate diurnal and other movement.

NOTE:
Power cable exits through Decorstop detail at this location for one or multiple synchronized actuators. See drawing GA-1506-005 (I)

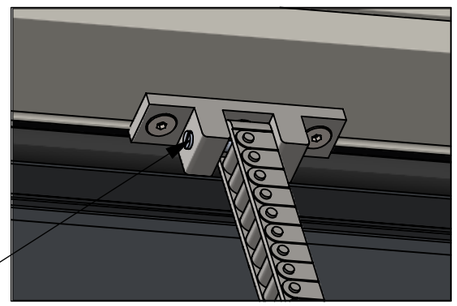

Disconnect the actuator chain from casement bracket by removing shaft screw M6, this will allow the chain to be pulled free from the top bracket. suitable support must be used prior to releasing the actuator chain; IE. Timber blocks

REVISIONS		
REV.	DESCRIPTION	DATE
A	Note statement for chain releasing amened.	05/03/2019

Customer
-

Title
Pyramid 30 Elongated Elec. Vent.

Date
16/11/2018

Drawn By
WK

Revision
A

Project
STD-1506-005 (I)

É 2014 This drawing remains the property of Sunsquare Limited and must not be copied or passed to a third party without written permission.

Sunsquare Limited
Unit D1 Drinkstone Investment Park
Kempson Way
Bury St Edmunds
Suffolk IP32 7AR
0845 226 3172

sunsquare.co.uk

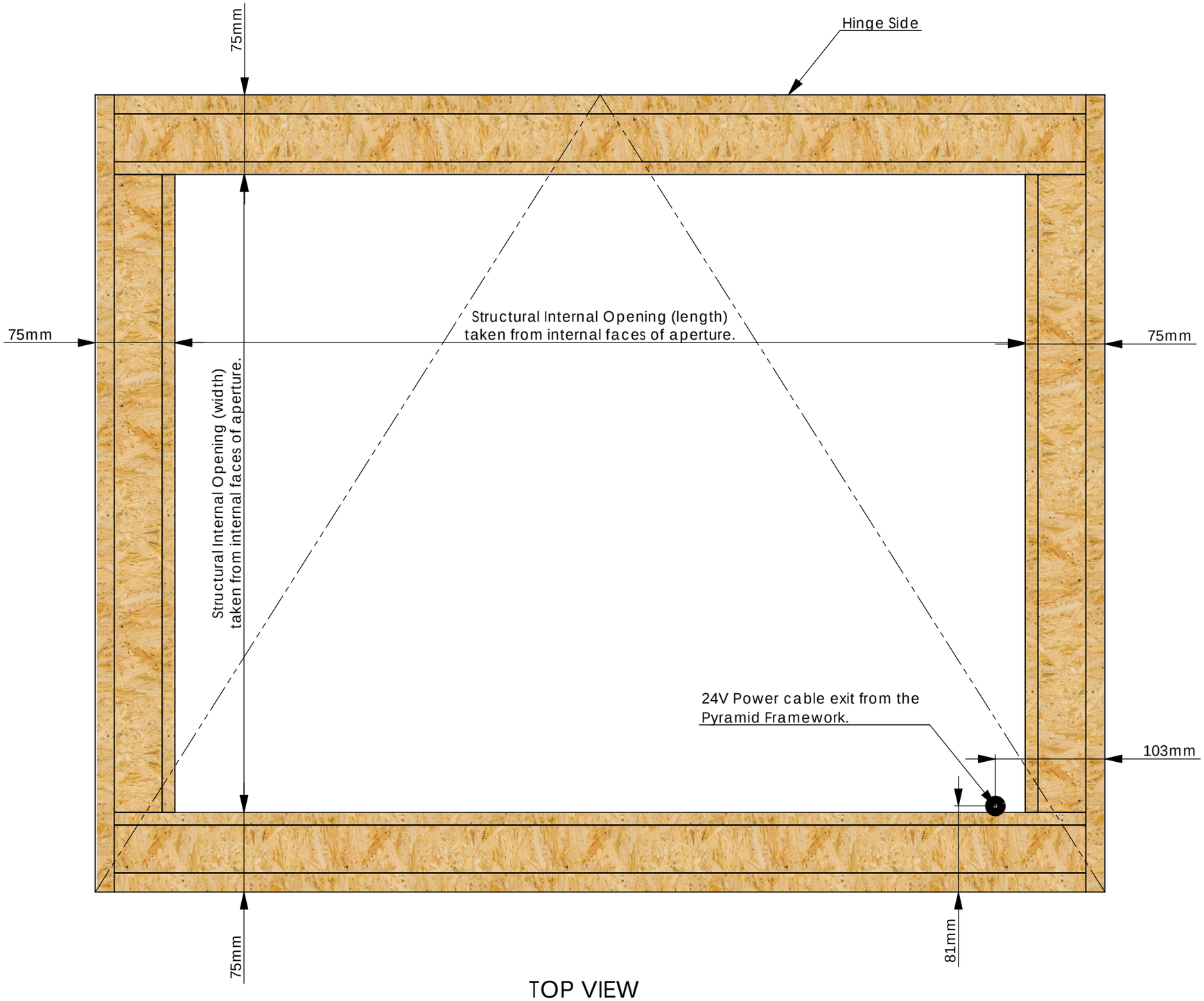

TOP VIEW

Customer
-

Title
75mm fully insulated upstand supplied by Sunsquare Ltd. (Optional).

Date
16/11/2018

Drawn By
WK

Revision
A

Project
STD-1506-006 (I)

É 2014 This drawing remains the property of Sunsquare Limited and must not be copied or passed to a third party without written permission.

Sunsquare Limited
Unit D1 Drinkstone Investment Park
Kempson Way
Bury St Edmunds
Suffolk IP32 7AR
0845 226 3172

sunsquare.co.uk

AEV CONTROL PANEL 75



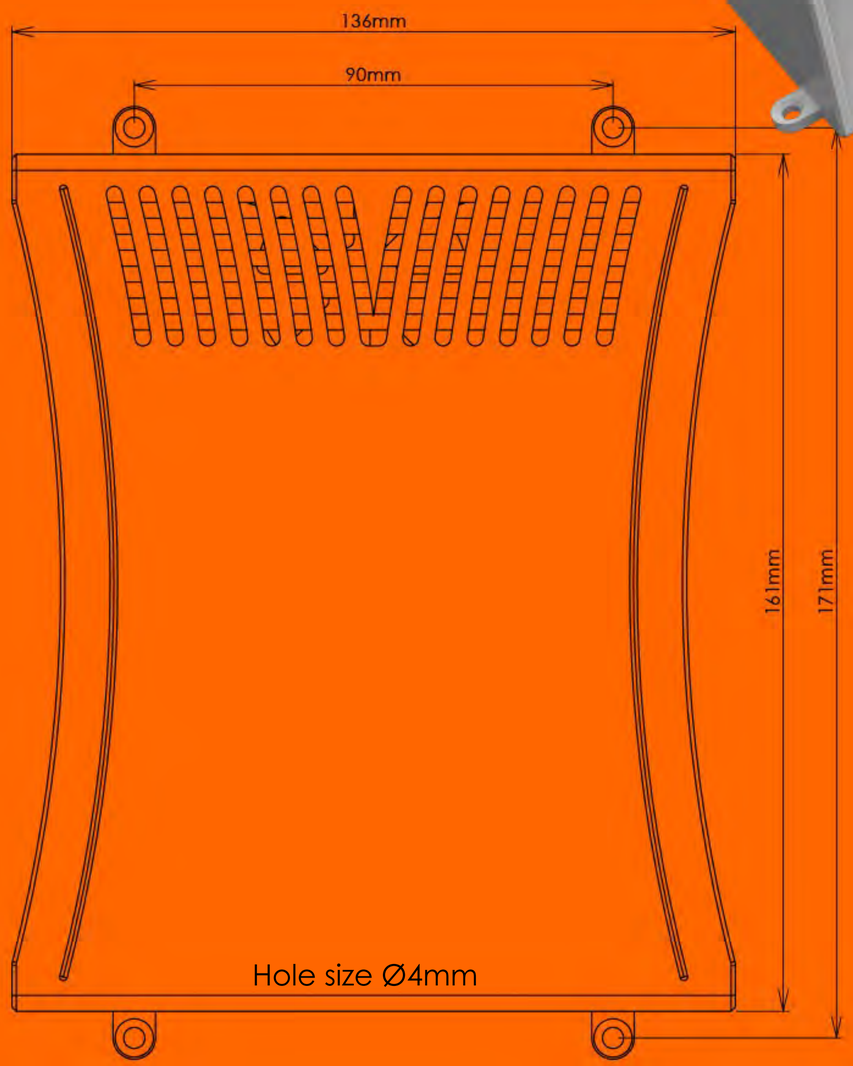

Product description:
The control panel for operation of Aero Electric Vent with 24VDC actuators. The unit can be linked to a variety of manual or automatic inputs:

- Switch (standard),
- Weather pack (optional),
- Rain sensor (optional),
- Remote control (optional),
- Touchscreen programmable controller and weather station (optional).

All accessories are connected to the control panel with plug and play connectors.

Dimensions:
171mm x 136mm x 78mm (WxHxD)

Primary mains input:
Input voltage- 230V ±10% ~ 0.5A.
The nominal output voltage for all accessories:
±24 V DC / 3.12A,
Duty cycle: 10% (2Min./ 18Min.)
IP rating: IP20
Operating temperature -10 to +50˚C



Installation:

- For indoor installation only,
- The surface should be cleaned with a soft damp cloth using a small amount of household cleaner.
- Do not place in dusty surroundings.
- Do not cover.
- Do not expose to direct sunlight.
- Before commencing any maintenance of Skylight or work on accessories, disconnect control panel from mains supply.
- All packaging can be recycled.
- For technical queries please contact Sunsquare Ltd. T: 01284 723377

sun

www.sunsquare.co.uk

KM 619677
PP 519

Optional

Touchscreen programmable controller and weather station.

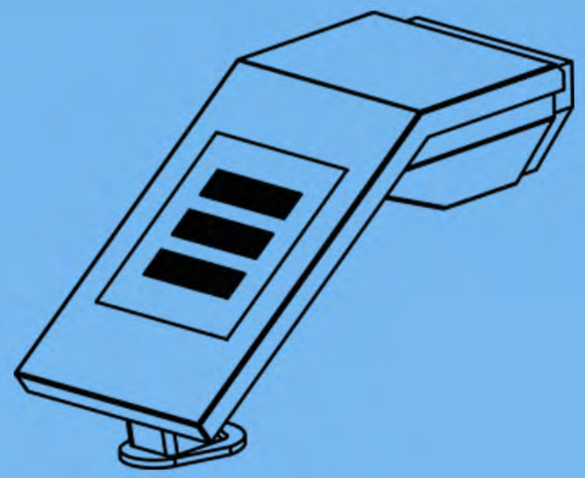



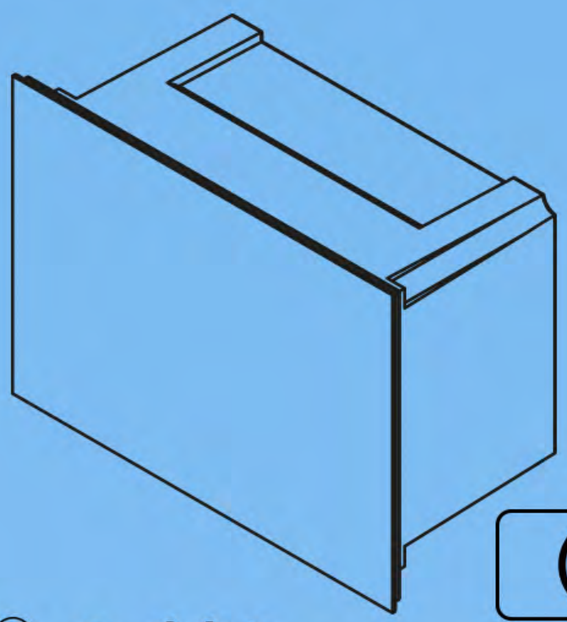



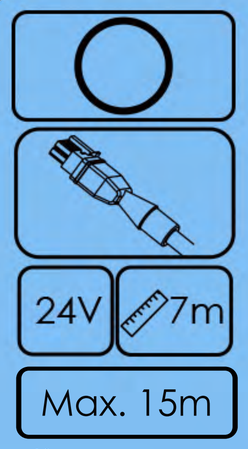

Install as per supplied instructions.

Aero Electric Vent

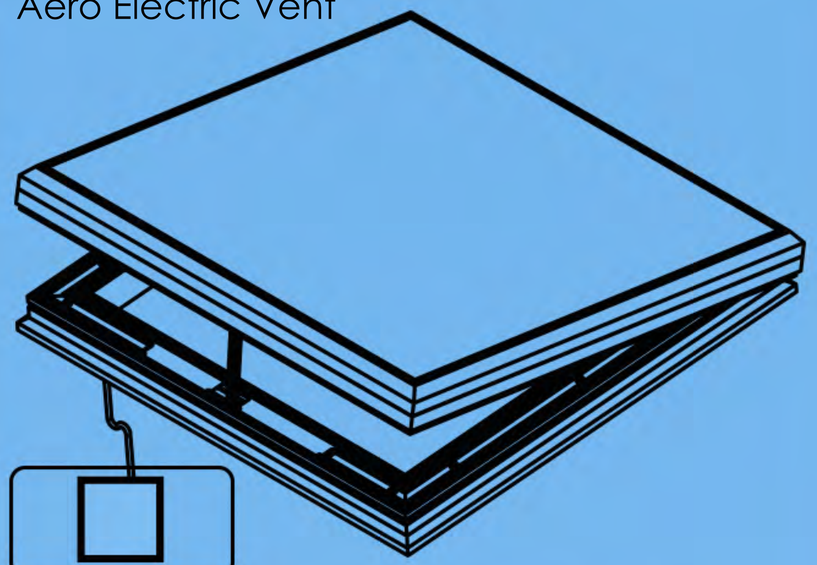

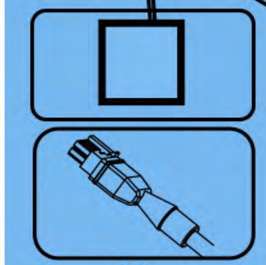

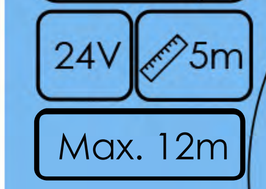

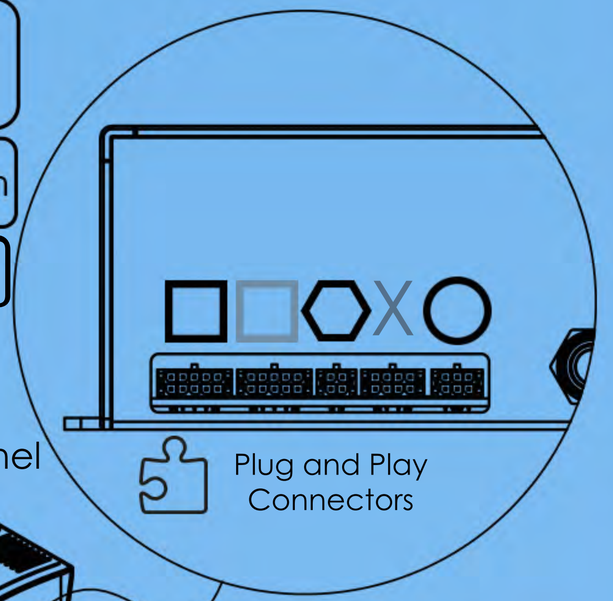

Control Panel

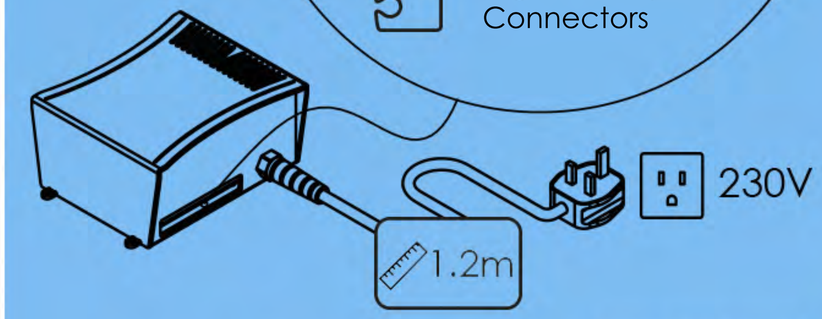

Switch

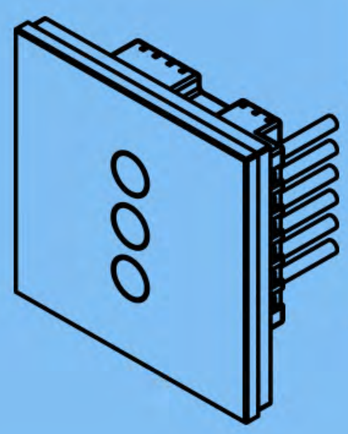

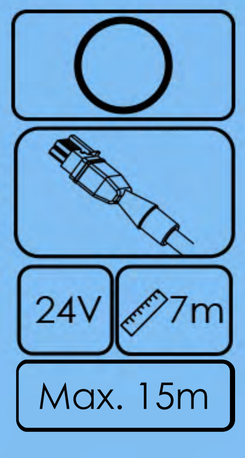

wait 2 minuts for the switch to power up

Weather pack

Optional

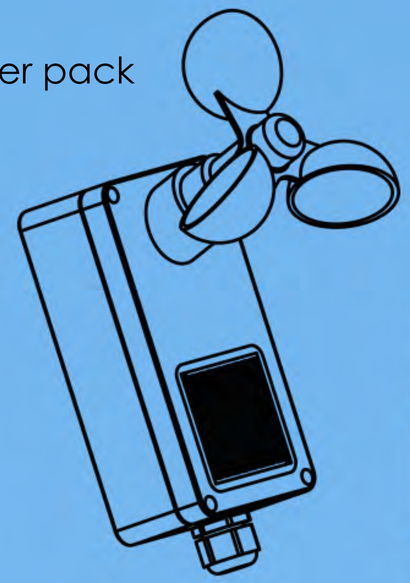

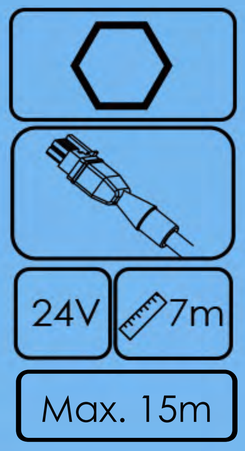



Rain sensor

Optional

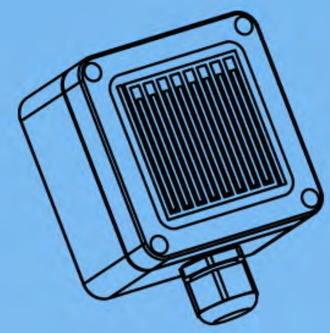

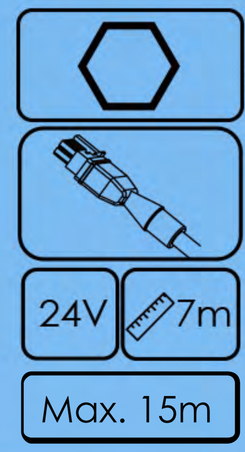



Remote control

Optional

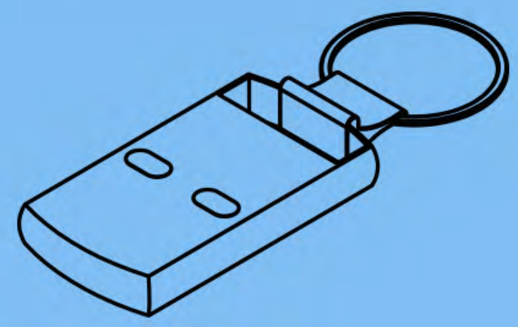



433.92MHZ 50M (indoor)

*The remote control is not compatible with Touchscreen Programmable Controller.