ROOF ACCESS | SMOKE VENTS | GLAZED | FLOOR ACCESS | BIOMASS | LADDERS | JAKDOR

ACCESS PRODUCTS



SURESPAN

The Administration Of Civil Defence

UKAS MANAGEMENT SYSTEMS 003

bsi.

ISO 9001:2015 FM23434

SURESPAN

ACCESS PRODUCT SPECIALISTS

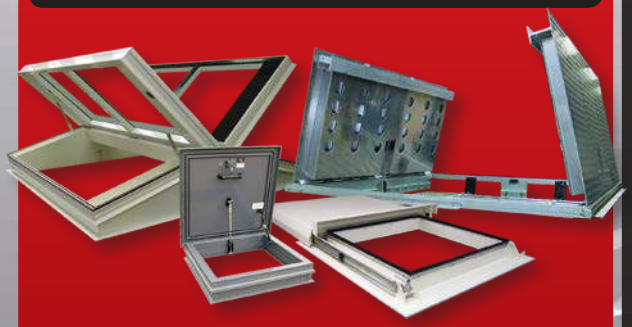

IN TOUCH WITH TOMORROW

Surespan is the market leader in the innovative design and manufacture of roof hatches, access covers and ladders. Stock sizes are illustrated and alternatives can all be built to order. We pride ourselves on offering clients the complete 'Access Package' as we are also able to offer ceiling and wall panels, roof lights, floor ducting as well as a low maintenance roof handrailing system.
Surespan provides a full range of access covers for internal and external uses, ranging up to 158kN/m² live loads, which are offered in standard sizes or custom made to suit individual needs.

Surespan products are made to modern designs and manufactured in a high-tech environment to close tolerances for precision engineering making the operation easy.

SERVICE CONTRACTS

It is recommended that all access hatches are regularly serviced and maintained by specialist personnel. Surespan can offer a service contract or maintenance agreement which provides tailored maintenance schedules to give peace of mind to the building's owners and occupiers.

OUR GUARANTEE

Surespan offers a comprehensive warraty on all of it's products. Proprietory and bought in components are supported by the respective manufacturers warranties.

ROOF

6 MANUAL OPENING

Standard Roof Access Hatch
Page 7 - Fire Rated Hatch



8 PLANT ROOM ACCESS

Plant Room Access Hatch



9 CONSERVATION HATCH

Replacement Roof Hatch
for existing upstands



10 DOUBLE LEAF

Double Leaf
Roof Hatch

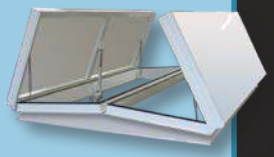

12 SLIDING

Sliding roof hatch

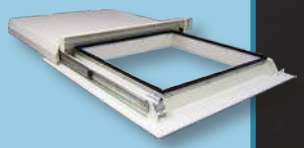

SMOKE VENTS

17 140° Smoke Ventilation/Roof Access

CE Marked to EN12101-2
SRHP/AOV Smoke Vent
with offset mechanism
for roof access and daily
ventilation



18 140° Bespoke Smoke Vent

CE Marked to EN12101-2
Sizes up to 3000 x 1800mm
Concealed Actuators option
Daily Ventilation

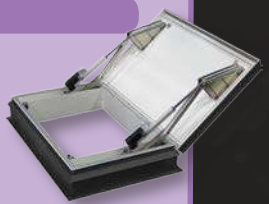

19 Glazed Smoke Vent

CE Marked to EN12101-2
Sizes up to 3000 x 1400
Glazed Lid
Concealed Actuators option



www.surespancovers.com Tel: +44(0)1922 711185

GLAZED

22 FIXED GLAZED

Fixed glazed rooflights

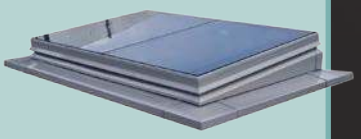

24 GLAZED ROOF ACCESS

Glazed roof hatch



26 WALK-ON GLASS/PAVEVENTS

Walk-on glass access hatches and fixed glazed units

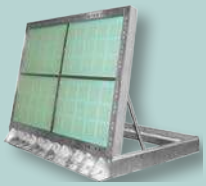

FLOOR DOORS

30 HIAC RECESSED

For internal or external use with a variety of infill



36 SAC FLUSH ACCESS HATCH

Pedestrian to FACTA Class E rating

40 - Heavy Duty SAC

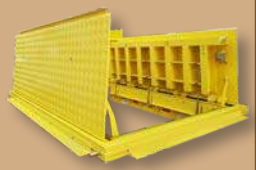

42 RSI UPSTAND

For use in non traffic areas

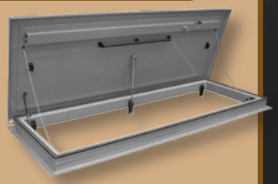

44 FLOOR DUCTING

Fast and easy to install modular floor ducting

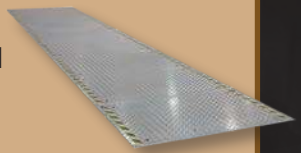

BIOMASS

48 SAC FLUSH BIOMASS HATCH

Flush Biomass access covers



49 RSI UPSTAND BIOMASS HATCH

Upstand Biomass hatch for non traffic areas



LADDERS

52 STANDARD LADDERS

Standard access ladders



54 SHIPS LADDERS

Ships access ladders



56 ZIP LADDERS

Zip 4-7
Zip 8



60 DROPDOWN LADDERS

Drop down safety ladders



JAKDOR

62 JAKDOR ACCESS PANELS

Metal Door & Picture Frame

Metal Door & Beaded Frame

Plasterboard Door & Beaded Frame



PROJECTS

66 INTERNATIONAL PROJECTS

SURESPAN

ROOF ACCESS



ROOF ACCESS

All Surespan thermally broken access hatches are engineered with the best available materials, primarily aluminium or stainless steel to provide the ultimate in performance and complement the building. Surespan products are manufactured to a modern design and in a high-tech environment to close tolerances, to ensure we achieve the maximum in efficiency with our thermally broken sections.

Standard roof hatches are offered with stainless steel gas spring assisted opening for effortless, efficient and safe operation. Other mechanical and electrical opening options are available including solar powered electric actuators.

All Surespan access products can be offered polyester powder coated to any RAL colour.



ROOF

6 MANUAL OPENING

Standard Roof Access Hatch
Page 7 - Plant Room Access Hatch



8 FIRE RATED ROOF ACCESS

UL Certified Fire Rated Hatch



9 CONSERVATION HATCH

Replacement Roof Hatch for existing upstands

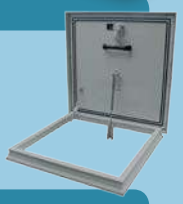

10 DOUBLE LEAF

Double Leaf Roof Hatch

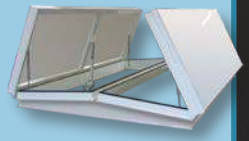

12 SLIDING

Sliding roof hatch

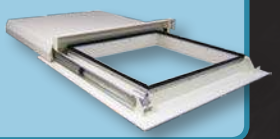

KIELDER OBSERVATORY

Bespoke double door roof hatches





BURJ KHALIFA DUBAI

Stainless steel submarine hatch for access to aircraft Warning Lights.



DIDCOT POWER STATION

6000 x 4000mm Electric Sliding Roof Hatch





FERRARI WORLD ABU DHABI

5400 x 4000 Sliding hatch for roller coaster maintenance.



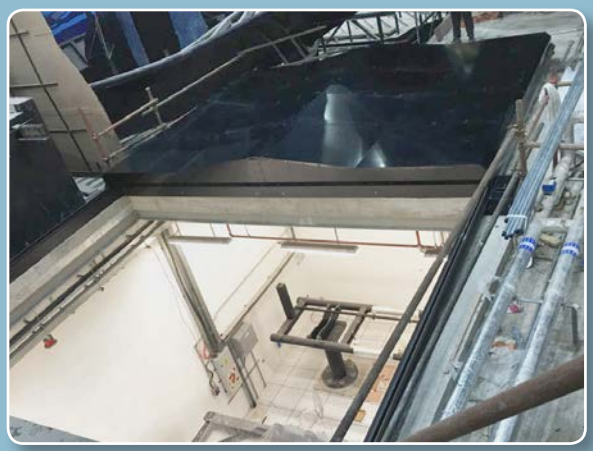

ROOF TERRACE ACCESS LONDON

750 x 2500 Glazed Sliding hatch for roof access

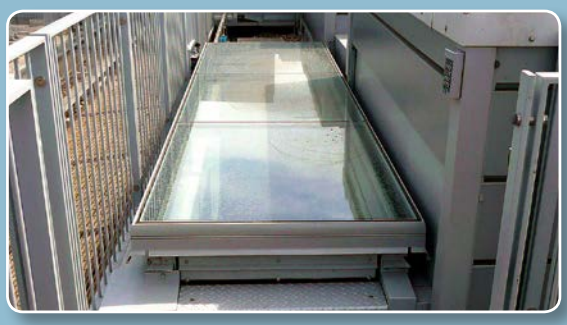





SRHP/50

Standard features
50mm PIR Insulation
0.43 W/m²K

50mm THERMAL BREAK

OPTIONAL:
50mm Non Combustible
Mineral Wool Insulation
0.78 W/m²K

SRHP/75

Standard features
75mm PIR Insulation
0.23 W/m²K

75mm THERMAL BREAK

OPTIONAL:
75mm Non Combustible
Mineral Wool Insulation
0.43 W/m²K

SRHP50/75 STANDARD HATCHES

Standard features

- Full 50mm or 75mm Thermally Broken sections
- Insulation U-Value 0.43 W/m²K fully insulated and energy efficient
- Secure rigid aluminium weather tight construction
- Hatch designed to support a live load of 200 kg/m²
- LO1 Locking - Stainless steel Cablock – (Other options available)
- Rw25dB acoustic rated
- Double unbroken seals
- Gas spring assisted operation
- Hold open stay
- Pull down handle
- Available in stock sizes detailed below
- Custom made to any size
- Predrilled holes in base flange

CUSTOM MADE TO ANY SIZE

SRHP50

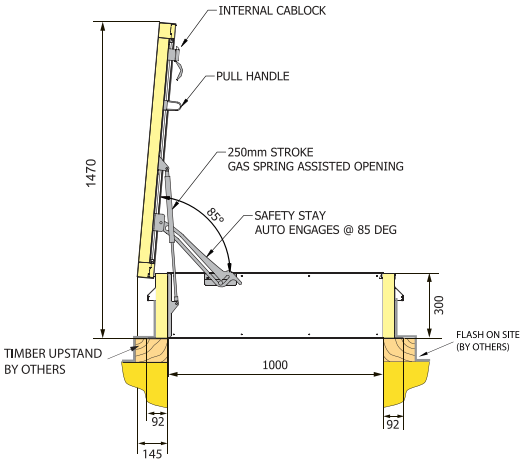

SRHP75

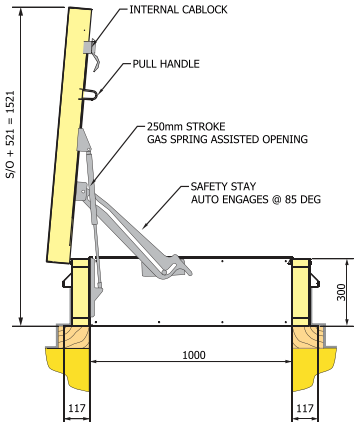


Evendons Primary School - Wokingham

LADDER ACCESS SIZES

Structural Opening			Weight (kg)
600	x	600	42
750	x	750	54
750	x	900	58
900	x	900	60
1000	x	1000	66
1500	x	750	75
1200	x	1200	76
2500	x	750	85

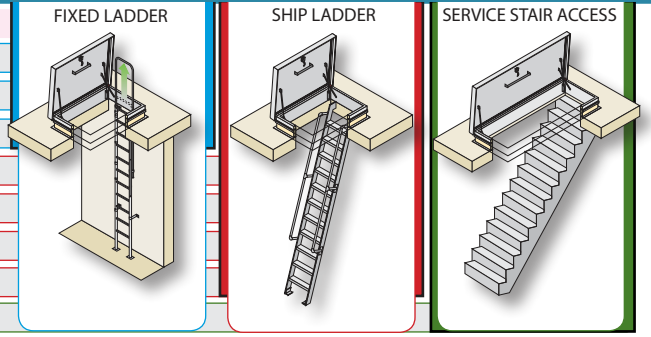

Suggested stock sizes for each application.

Hatch with zip ladder access





SRHP/25

Standard features
25mm PIR Insulation
0.78 W/m²K

25mm THERMAL BREAK

OPTIONAL:
25mm Non Combustible Mineral Wool Insulation
1.14 W/m²K

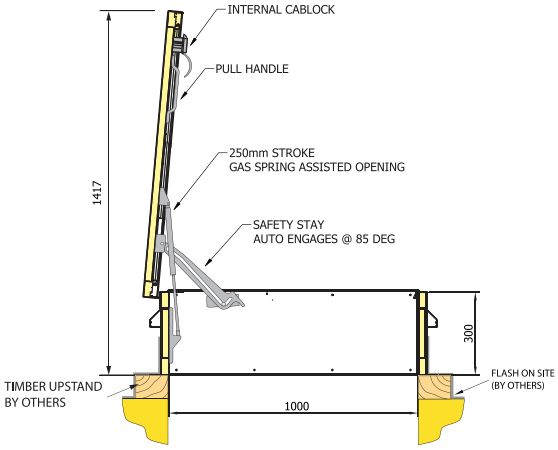

SRHP/25 PLANT ROOM ACCESS

Standard features

- Full 25mm Thermally broken sections for outstanding insulation
- Insulation U-Value 0.78 W/m²K
- Secure rigid aluminium weather tight construction
- Hatch designed to support a live load of 200 kg/m²
- LO1 Locking - stainless steel heavy duty Cablock – non locking
- Curb liner
- Heavy Duty Continuous Hinges
- Double unbroken bubble and blade seals
- Gas spring assisted operation
- Hold open and closing stay

SRHP25 - Aquaventure Waterpark in Atlantis





Bargoed Library - Wales



Oasis Academy Lord's Hill - Southampton



Roof Hatch for Pitched Roof



HOW TO SPECIFY & ORDER

Choose your model and add the option codes listed, see the example below for a 1000 x 1000 Standard roof hatch with cab lock key locking external handle, and powder coated to RAL 9002. SRHP50 - L04/RAL9002-100.100

If in doubt give our sales team a call on 01922 711185 or use the mail form on our website to contact us.

FIRE RATED ROOF ACCESS

STANDARD

50mm PIR Insulation
0.43 W/m²K

OPTIONAL:
50mm Non Combustible
Mineral Wool Insulation
0.63 W/m²K

UP TO 4 HOURS FIRE RATED

UL APPROVED

UL EU

Surespan UL EU Approved SRHTBFR Fire rated roof hatches for up to 90 minutes.



SRHTB/FR

Standard features

- Full 50mm Thermally Broken sections
- Secure rigid aluminium weather tight construction
- Hatch designed to support a live load of 200 kg/m²
- LO1 Locking - stainless steel heavy duty Cablock – non locking
- Double unbroken seals
- Gas spring assisted operation
- Hold open stay
- Pull down handle
- Available in stock sizes detailed below
- Custom made to any size
- Predrilled holes in base flange

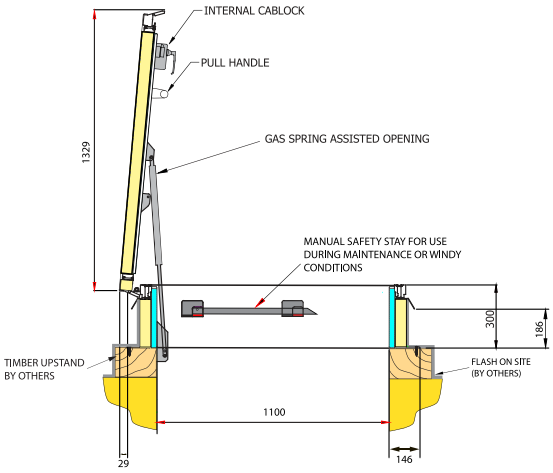

CUSTOM MADE TO ANY SIZE

SRHTB/FR ROOF HATCH PROJECT

Hong Kong Airport - 4 hours fire rated



SRHTB/FR ROOF HATCH PROJECT

Dubai International Airport - 2 hours fire rated



CONSERVATION ROOF HATCH

SRHP/RF

Standard features
50mm PIR Insulation
0.78 W/m²K

50mm THERMAL BREAK

OPTIONAL:
50mm Non Combustible Mineral Wool Insulation
0.63 W/m²K



SRHP/RF ROOF HATCH

Standard features

The replacement roof hatch is designed to provide a minimal sightline while still offering easy access. The built-on rain run-off skirt allows for installation to pre-weathered upstands, providing a weather tight finish.

- **Full 50mm Thermally broken sections**
- **Insulation U-Value 0.43 W/m²K**
- **Secure rigid aluminium weather tight construction**
- **The hatch designed to support a live load of 200 kg/m²**
- **LO1 Locking - stainless steel heavy duty Cablock – non locking**
- **Heavy Duty Continuous Hinges**
- **Double unbroken bubble and blade seals**
- **Gas spring assisted operation**
- **Hold open and closing stay**
- **Pull down handle**
- **Custom made to any size**

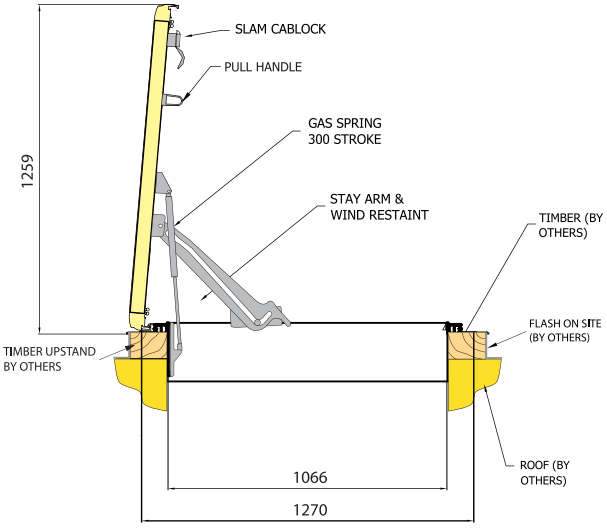

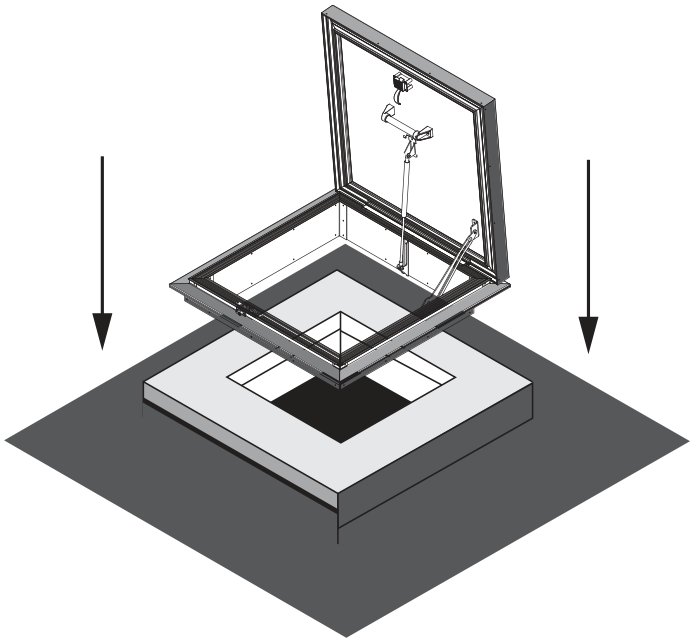

FOR EXISTING WEATHERED UPSTAND CONCRETE, TIMBER OR SIMILAR

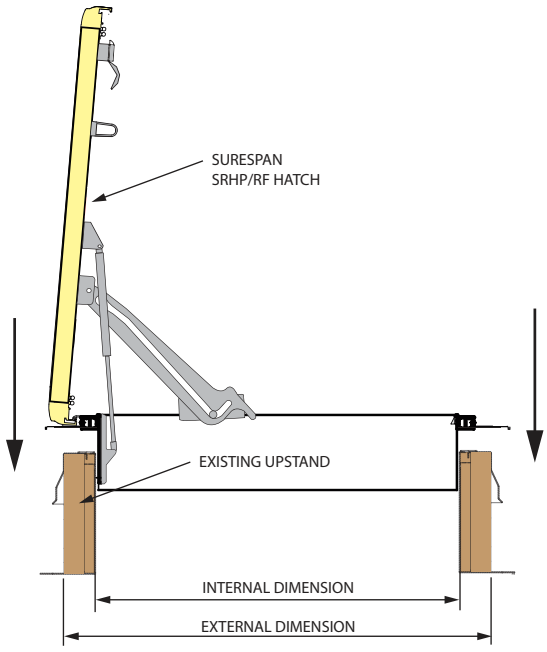

FOR EXISTING WEATHERED ROOF HATCH UPSTAND (ANY MANUFACTURER)



SRH/DL DOUBLE LEAF

Standard features

50mm PIR Insulation
0.43 W/m²K

OPTIONAL:
50mm Non Combustible Mineral Wool Insulation
0.63 W/m²K

CUSTOM MADE TO ANY SIZE

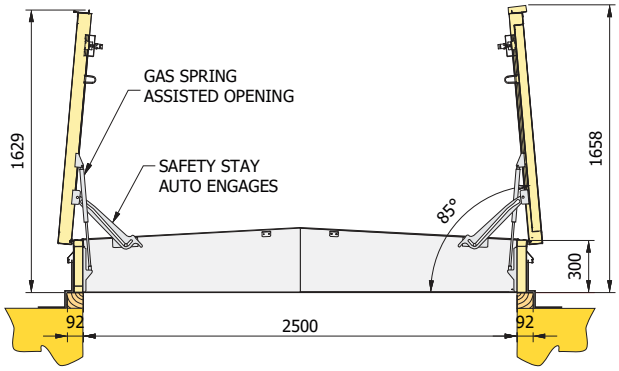

OPTIONAL FEATURES

	OPTION CODE
• Concealed gas springs	GSC
• Electrical option	E
• Acoustic rating to Rw45dB	45dB
• One hour fire rating	FR60
• Two hour fire rating	FR120
• Powder coated to any RAL colour	PC/RAL
• Trace Heating	TH
• SureGuard handrail	SURG
• Retractable Safety Grid	SG



HIGH SPEC DOUBLE LEAF



Surespan double leaf roof hatches are manufactured in aluminium with an optional polyester powder coated finish.



HOW TO SPECIFY & ORDER

Choose your model and add the option codes listed above. See the example below for a 2000 x 2000 double leaf roof hatch with external handle and 3 point locking, curb liner, 1 hour fire rated and powder coated to RAL 9002.
SRH/DL – L04/L08/CL/FR60/RAL9002-200.200

If in doubt give our sales team a call on 01922 711185 or use the mail form on our website to contact us.

SRH/DL/FRC - FIXED RAIN CHANNEL

- Any locking option
- Gas spring
- Hold open stay
- Curb liner
- Fixed rain channel
- Standard features all as double leaf hatch with the addition of a fixed rain channel and non sequenced opening



CUSTOM MADE TO ANY SIZE





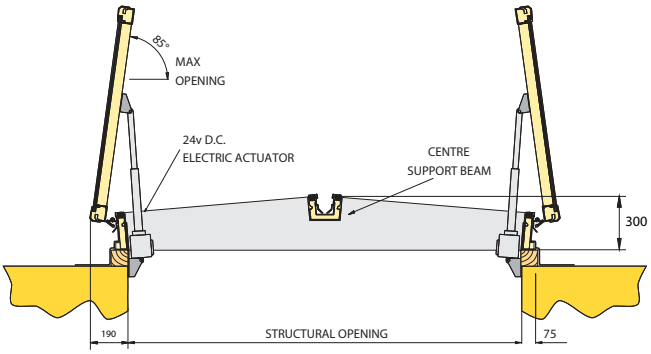

SPECIAL PROJECTS

Brief: The client needed to manoeuvre large and heavy items of plant in/out of the building. There was insufficient space and head room for internal lifting equipment.

Solution: Surespan designed and supplied an electrically operated, double leaf roof hatch allowing crane access through the roof.


National Oil Well



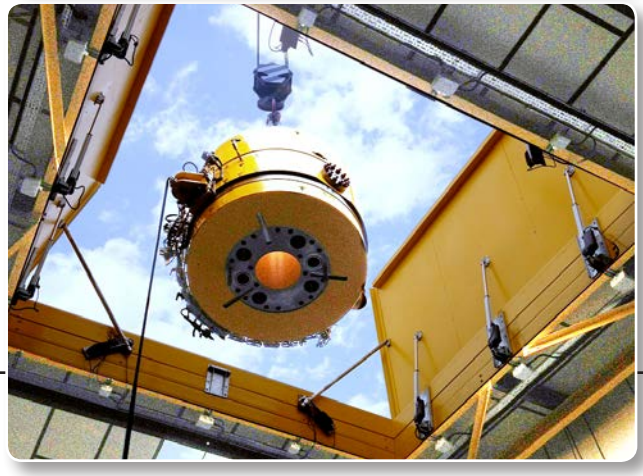



SLH SLIDING ACCESS HATCH

Standard features

Surespan SLH sliding access hatch. Metal top or glazed sliding hatches are ideal in areas where there is height restriction or risk of high wind. Hatches up to 1500mm of travel are available with completely retractable sliding gear operated by hand or motorized.

FIXED RAIL

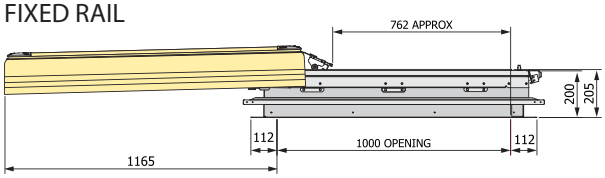

TELESCOPIC RAIL

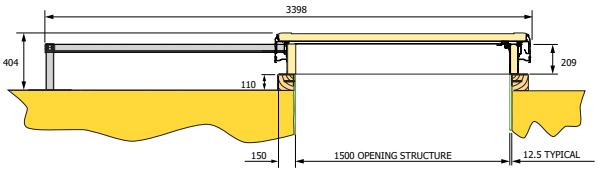

OPTIONAL FEATURES

	OPTION CODE
• Retractable Telescopic Rails up to 1500mm	RSG
• Electrical option	E
• Solar	SOLAR
• Locking - Internal sliding bolt with padlock hasp	SB
• Pressure sensitive edge	PS
• Polyester powder coated to any RAL colour	PC/RAL
• Rain skirt	RS
• Trace Heating	TH
• SureGuard handrail	SURG

CUSTOM MADE TO ANY SIZE

OPERATION

MANUAL

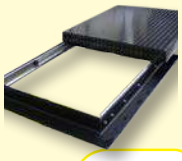

MAN

ELECTRIC



E



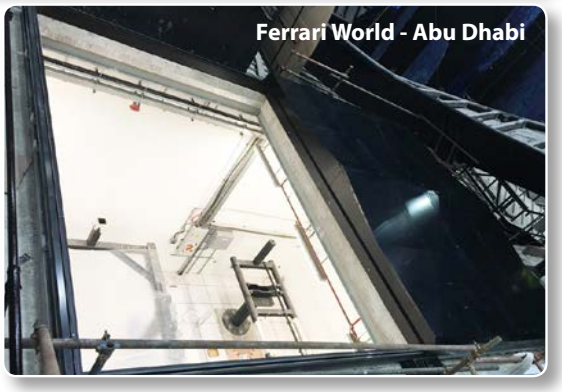

HOW TO SPECIFY & ORDER

Choose your model and add the option codes listed above. See the example below for a 1000 x 1000 electrically operated sliding hatch with retractable slider and powder coated to RAL 9002.
SLH/E – RSG/RAL9002-100.100

If in doubt give our sales team a call on 01922 711185 or use the mail form on our website to contact us.

QUEBEC BI-FOLDING SLIDING DOOR - 1 OF 6





SLIDING ROOF ACCESS SOLUTIONS


Sliding Glass Roof Access - London


Porsche Aftersales Centre - London


Porsche Aftersales Centre - London


Didcot Power Station 6000 x 4000

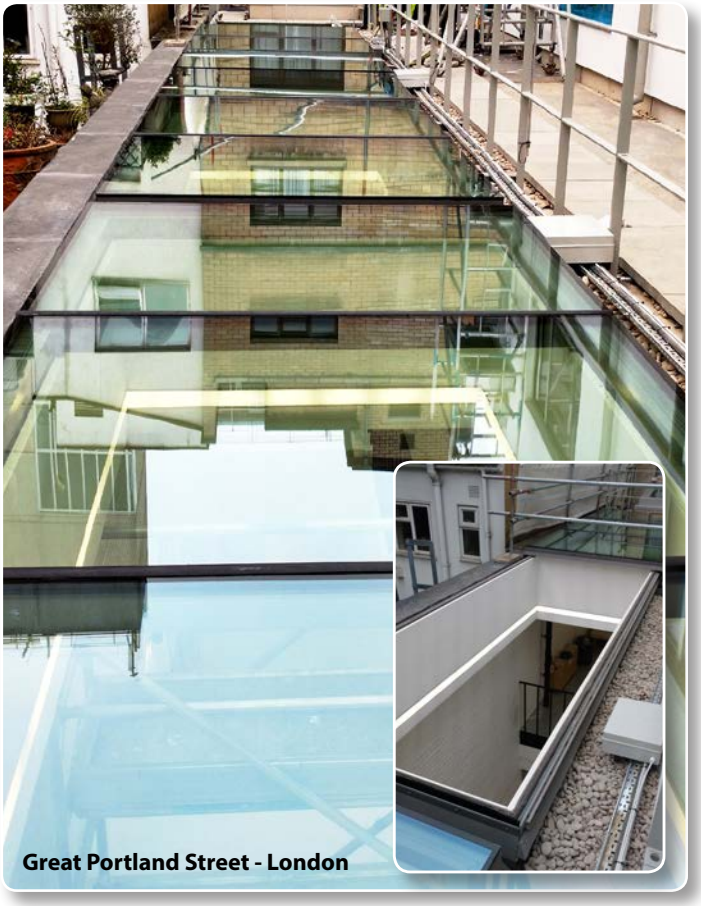
Great Portland Street - London


Sliding Glass Roof Terrace Access - London

ROOF ACCESS - OPTIONS

INTERNAL SKIRT LINER WITH ZIP LADDER

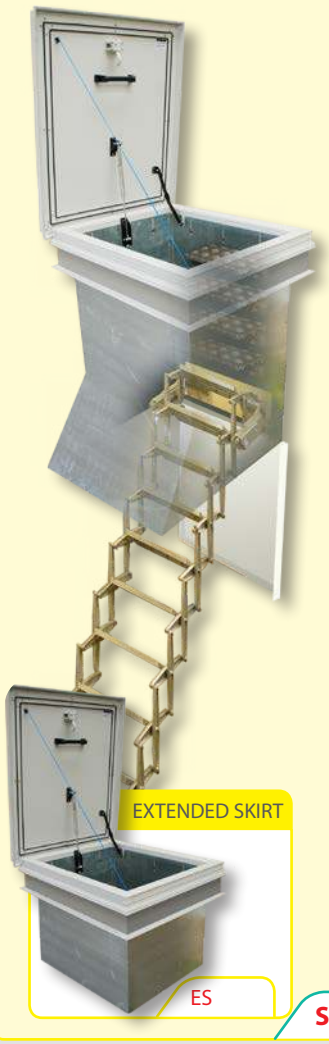

ZIP LADDERS

Full range of ZIP ladders

SEE LADDERS SECTION P.62

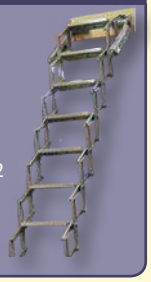



ANGLED SKIRT

ESA

EXTENDED SKIRT

ES

SEE PAGE 29

EXTENDED SKIRT WITH ZIP LADDER

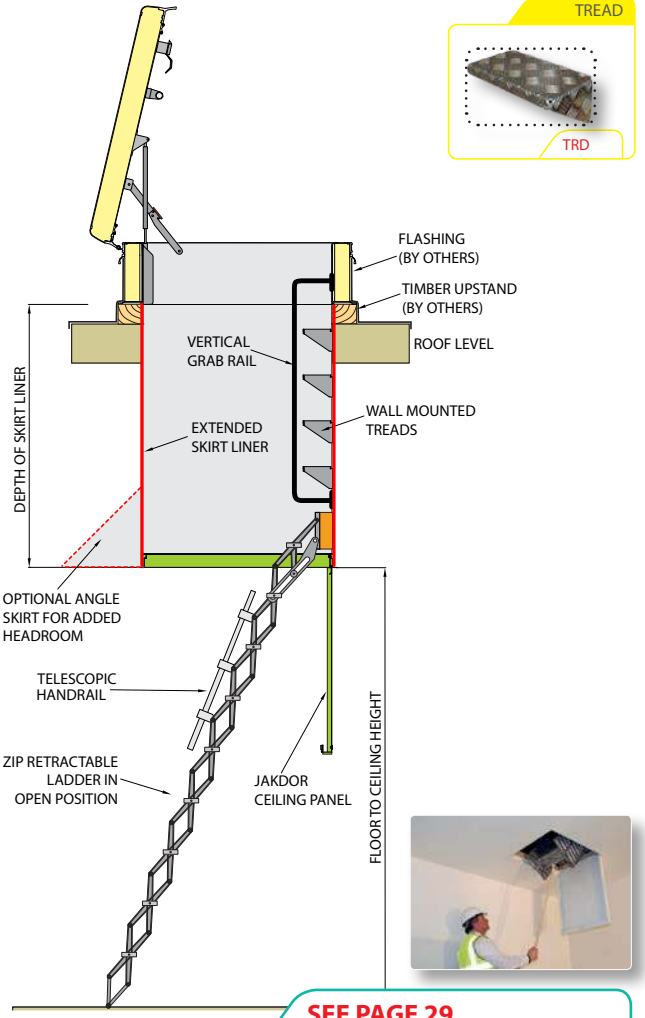

SEE PAGE 29

LOCKING OPTIONS

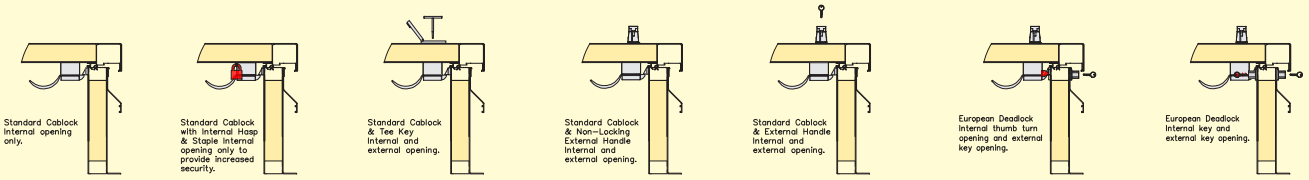

L01 L02 L03 L04 L05 L06 L07

SAFETY GRID

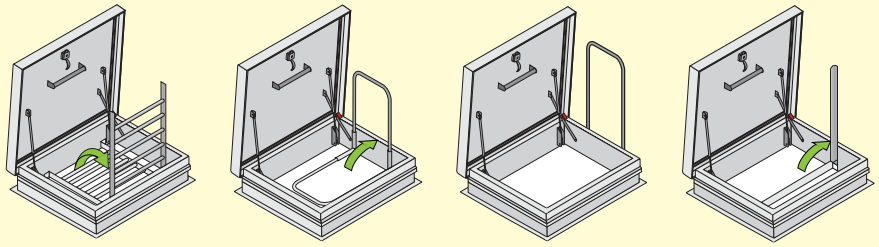

Retractable Safety Grid — SRH/SG

Retractable Hand Hold — SRH/RH

Fixed External Hand Hold 1100 High — SRH/FH

Retractable Hand Hold Single Post — SRH/RP

SUREGUARD

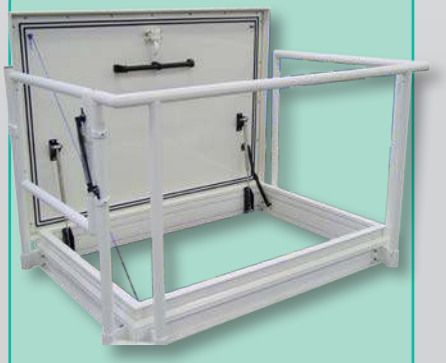

THERMAL BREAK



Thermally broken extrusions to control heat loss.
STANDARD

THM

TRACE HEATING

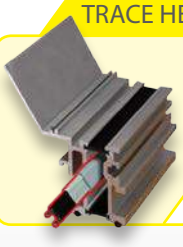

Trace heating elements placed within extrusion.

TH

ACOUSTIC



30dB
45dB

FIRE RATING



FR60
FR120
FR240

CONCEALED GAS SPRING



GSC

PRESSURE SENSITIVE EDGE



PS

LOUVRED UPSTAND



VU

WALK-ON TOP



SWO

METAL DECK LINER

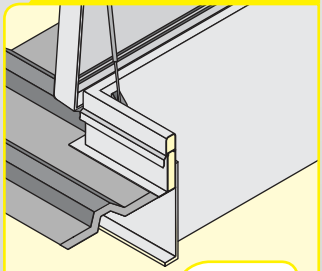

MDL

VARIABLE UPSTAND

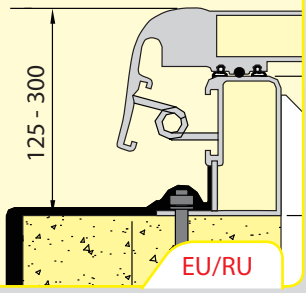

EU/RU

STAINLESS STEEL



SS304
SS316

POWDER COATING



PC/RAL
PC/RAL2

RAIN SKIRT

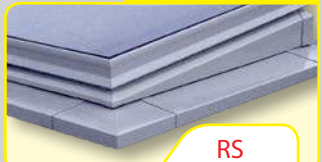

RS

CURB LINER



CL

OPENING OPTIONS

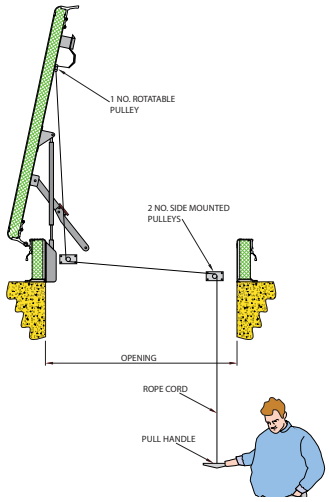

Ideally prior to ascending ladder the hatch should be opened.

ELECTRIC



E

SOLAR

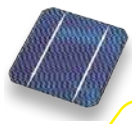

SOLAR

HYDRAULIC



HYD

WINCH



WINCH

RAIN SENSOR

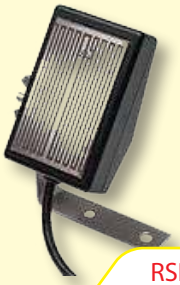

RSR

WIND SPEED SENSOR



WS

ROOF PITCH



SRH/RI

UL EU APPROVED



Surespan UL EU Approved SRHTBFR Fire rated roof hatches for up to 90 minutes.

FR

MESH LINER

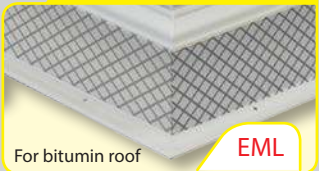

For bitumin roof

EML

See operations tab

SURESPAN

SMOKE VENTILATORS



ALL OUR SMOKE VENTS ARE CE MARKED TO EN12101-2

SMOKE VENTS

Surespan SRHE/AOV Smoke Ventilators are designed to open in a variety of formats from 140˚ through to 160˚.
All our units come CE Marked and Tested to EN12101-2.

Operated by a 24v DC actuator the hatch lid is filled with 50mm of CFC and HCFC free insulation with a minimum U-Value of 0.43W/m^{2}K. This offers a high level of thermal insulation, together with excellent sound absorption properties. If required, certain units can be supplied with Non-combustible Mineral Wool Insulation

The lids are supported by heavy-duty axel pins and feature an integral 'wrap over' edge, incorporating double unbroken EPDM seals.

SERVICE CONTRACTS

It is recommended that an AOV system is regularly serviced and maintained by specialist personnel on a regular basis.
Surespan can offer a service contract or maintenance agreement which provides tailored maintenance schedules to give peace of mind to the building's owners and occupiers.

SMOKE VENTS

17 140° Smoke Ventilation/Roof Access

CE Marked to EN12101-2
SRHP/AOV Smoke Vent
with offset mechanism
for roof access and daily
ventilation



18 140˚ Bespoke Smoke Vents

CE Marked to EN12101-2
Sizes up to 3000 x 1800mm
Concealed Actuators option
Daily Ventilation

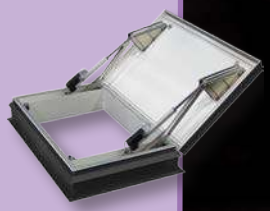

19 Glazed Smoke Vents

CE Marked to EN12101-2
Sizes up to 3000 x 1400
Glazed Lid
Concealed Actuators option

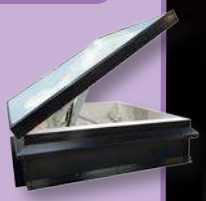





SOLID INSULATED LID



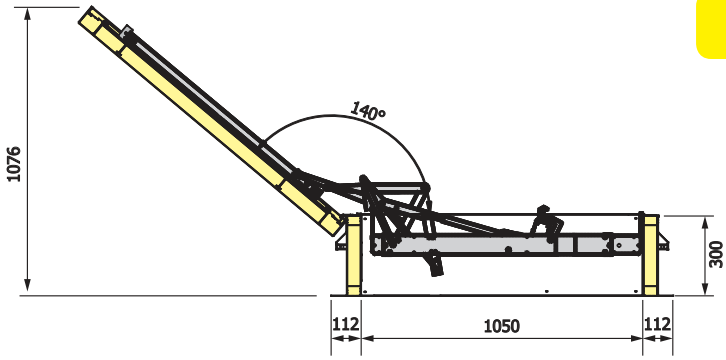

SMOKE VENT - CE MARKED SRHP/AOV

Standard features

- 50mm PIR Insulation 0.43 W/m²K
- 50mm THERMAL BREAK
- 140° OPENING SOLID TOP OR DOME LID
- OFFSET MECHANISM FOR PERSONNEL ACCESS
- COMFORT VENTILATION

OPTIONAL:

- 50mm Non Combustible Mineral Wool Insulation 0.63 W/m²K

CUSTOM MADE TO ANY SIZE

AOV SMOKE VENTILATORS

Model	STRUCTURAL OPENING			AIRFLOW Approved Document B Geometric Area
SRHP/AOV 105.105	1050	x	1050	1.01m²
SRHP/AOV 126.126	1260	x	1260	1.58m²
SRHP/AOV 130.105	1300	x	1050	1.36m²
SRHP/AOV 150.105	1500	x	1050	1.57m²

Suggested sizes for each application.

POLYCARBONATE DOME



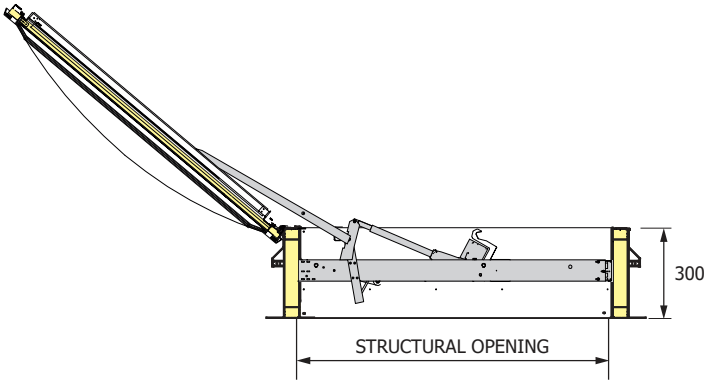

EN12101-2 PERFORMANCE

Free Aerodynamic Area	1.0 or 1.5m²
Reliability	RE 1,000 (10,000 Comfort Ventilation)
Snow Load	SL 500
Low Ambient Temp	T (-15°)
Wind Load	WL 1500
Resistance to heat	B300



BESPOKE SMOKE VENT - CE MARKED

Standard features

- Any size up to 1800 x 3000mm
- 50mm PIR Insulation 0.43 W/m²K
- Thermally Broken lid and upstand
- 140° Opening Solid Top
- Mechanism(s) can be offset and/or concealed

CUSTOM MADE TO ANY SIZE

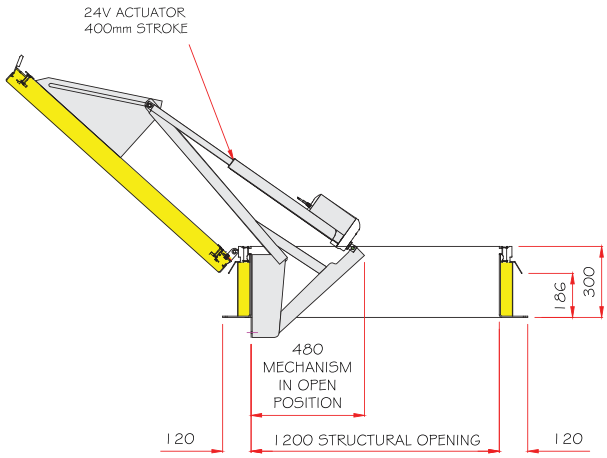

AOV SMOKE VENTILATORS

Model	STRUCTURAL OPENING	Free Aerodynamic Area m²	Mechanism Position
SRHE/AOV 105.105	1050 x 1050	1.00 m²	Single
SRHE/AOV 150.150	1500 x 1500	2.10 m²	Twin
SRHE/AOV 120.200	1200 x 2000	2.25 m²	Twin
SRHE/AOV 105.150	1050 x 1500	1.42 m²	Twin
SRHE/AOV 150.300	1500 x 3000	4.35 m²	Twin
SRHE/AOV 180.300	1800 x 3000	4.35 m²	Twin

Suggested sizes for each application.

BESPOKE SMOKE VENTS

University of the Arts - London
Bespoke electric roof hatch with combined smoke ventilation









Off set mechanism



Concealed mechanism



Concealed actuators

BESPOKE GLAZED AOV - CE MARKED

Standard features

- Any size up to 1400 x 3000mm
- Double Glazed 35.5mm Glass
- 50mm PIR Insulation 0.43 W/m²K
- Thermally Broken
- 140° Opening Glazed Lid
- Mechanism(s) can be offset and/or concealed

CUSTOM MADE TO ANY SIZE



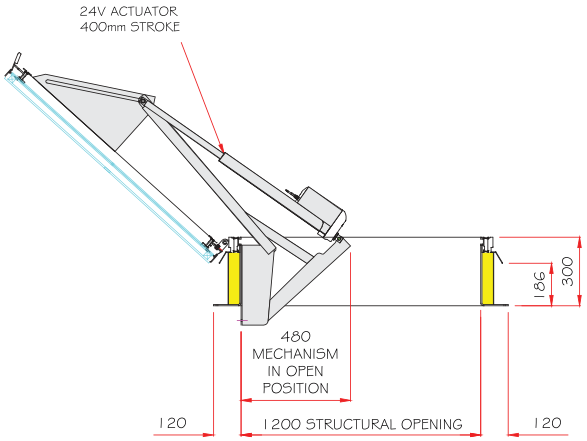

AOV SMOKE VENTILATORS

Model	STRUCTURAL OPENING	Free Aerodynamic Area m²	Mechanism Position
SRHGE/AOV 105.105	1050 x 1050	1.00 m²	Single
SRHGE/AOV 150.150	1500 x 1500	2.10 m²	Twin
SRHGE/AOV 120.200	1200 x 2000	2.25 m²	Twin
SRHGE/AOV 150.200	1500 x 2000	1.42 m²	Twin
SRHGE/AOV 140.300	1400 x 3000	3.90 m²	Twin

Suggested sizes for each application.

GLAZING SPECIFICATION

35.5mm sealed double glazed unit will comprise 6mm toughened K polished all round outer pane, 20mm Warm Edge silver spacer Bar argon filled, Pilkington 9.5mm toughened & laminated inner pane.


Great Portland Street - London
Electrically operated glazed sliding smoke ventilators - 4610 x 1955 mm




Southwark Street - London






The Glasshouse - Putney, London

SURESPAN

GLAZED ACCESS



GLAZED ACCESS

Surespan SRHG glazed access hatches are generally used where there is a need or desire to allow light into the area below the unit or to maintain external views. Most of our access hatches can be offered with a glazed lid with considerations being given for the size and weight of the unit.

In todays modern world there are various options for a glazing system. In collaboration with our glazing suppliers we can generally provide a system to meet whatever is required by our customers. Our range offers double glazed, triple glazed, walk-on, with various textures and finishes to suit.

As full members of the National Association of Rooflight manufacturers (NARM), we seek to ensure that our products conform to the latest standards and technology available in glazed systems.

narm
National Association of Rooflight Manufacturers

GLAZED

22 FIXED GLAZED

Fixed glazed

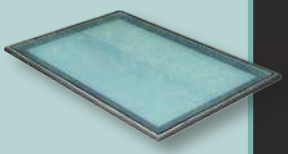

24 GLAZED ROOF ACCESS

Glazed roof hatch

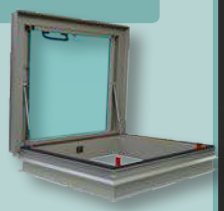

26 WALK-ON GLASS

Walk-on glass access hatches and fixed glazed units












Stratton House - London


Russell Cawberry - Sutton





FGL - FIXED ROOFLIGHT

Standard features

The 35.5mm sealed double glazed unit will comprise Pilkington 6mm toughened K polished all round outer pane, 20mm Warm Edge silver spacer Bar argon filled, Pilkington 9.5mm toughened & laminated inner pane. This sealed glazed unit has a U-Value of 1.5 W/m²K.

Surespan stock sizes are polyester powder coated RAL7015 Slate Grey as standard. Other RAL colours can be provided on request.

FGL/208

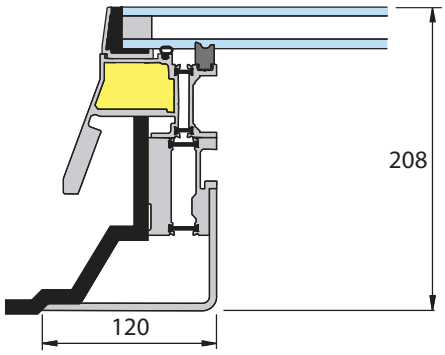

OPTIONAL FEATURES

	OPTION CODE
• Upstand 208mm	FGL/208
• Upstand 290mm	FGL/290
• Upstand - Custom size	EU/RU
• Walk on glass	GWO
• Ventilated upstand	VU
• Available powder coated to any standard RAL colour	PC/RAL
• Trace Heating	TH
• SureGuard handrail	SURG

CUSTOM MADE TO ANY SIZE

FGL/290

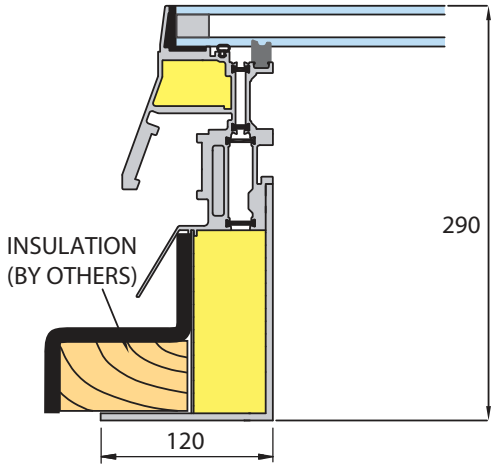



SIZES

PRODUCT Ref	SIZE	WEIGHT
FGL 60.60	600 x 600	41 kg
FGL 75.75	750 x 750	56 kg
FGL 900.900	900 x 900	71 kg
FGL 100.100	1000 x 1000	83 kg
FGL 120.120	1200 x 1200	107 kg
FGL 100.150	1000 x 1500	108 kg
FGL 100.200	1000 x 2000	133 kg

A minimum upstand pitch of 5 degrees is recommended.
For self cleaning glass 15 degrees is required.

HOW TO SPECIFY & ORDER

Choose your model and add the option codes listed above, see the example below for a 1000 x 1000 Fixed glazed rooflight 208 overall height with ventilated upstand, walk on glass and powder coated to RAL 9002. FGL/208 - VU/GWO/RAL9002-100.100

If in doubt give our sales team a call on 01922 711185 or use the mail form on our website to contact us.


Duke of York HQ - Chelsea

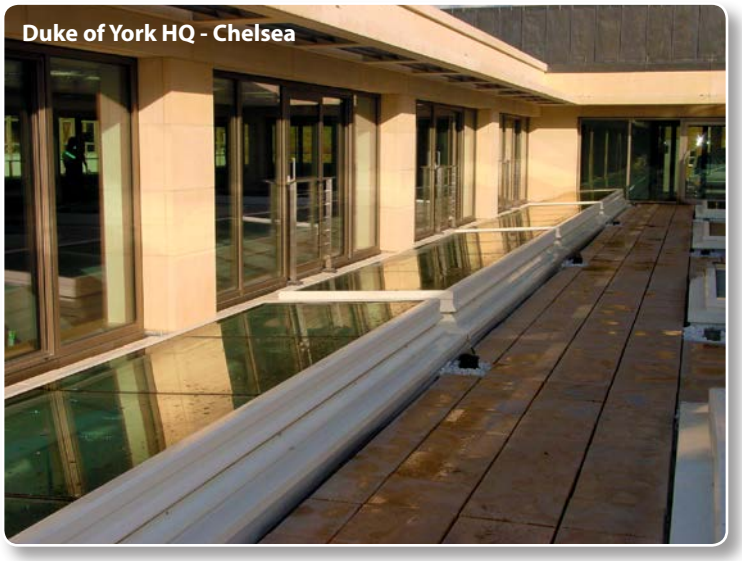
Duke of York HQ - Chelsea


Great Peter Street - London





THERMAL BREAK

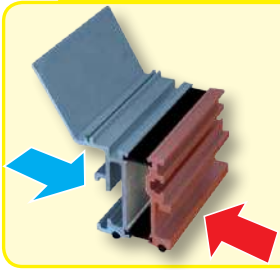

ODP




Circle Bath Hospital



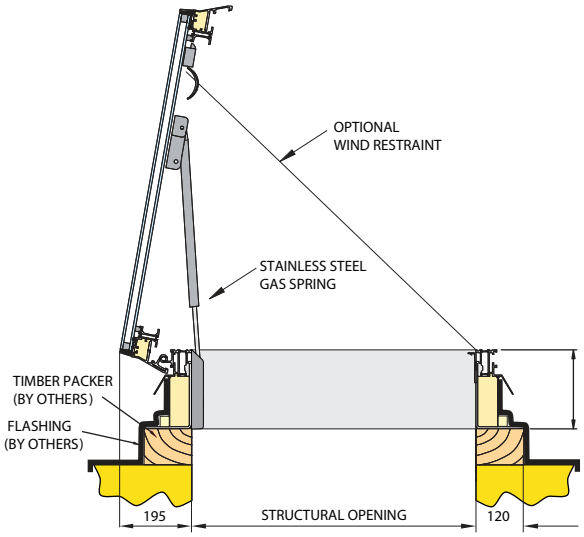



SRHG – GLAZED ROOF ACCESS

The 35.5mm sealed double glazed unit will comprise Pilkington 6mm toughened K polished all round outer pane, 20mm Warm Edge silver spacer Bar argon filled, Pilkington 9.5mm toughened & laminated inner pane. This sealed glazed unit has a U-Value of 1.5 W/m²K.

OPTIONAL FEATURES

	OPTION CODE
• Retractable safety grid	SG
• Retractable hand hold	RH
• Retractable single pole	RP
• Powder coated (RAL colours)	PC/RAL
• Acoustic to Rw45dB	45dB
• Extended/Reduced upstand	EU/RU
• Electric	E
• Solar	SOLAR
• Hydraulic (for larger hatches)	HYD
• Concealed gas spring	GSC
• Concealed motors	ECM
• Stainless steel SS304 & SS316	SS304 or SS316
• Walk on top surface	A (Loading)
• Pressure sensitive edges	PS
• Ventilated upstand	VU
•Trace Heating	TH
• Sureguard handrail	SURG

CUSTOM MADE TO ANY SIZE



Circle Bath Hospital

HOW TO SPECIFY & ORDER

Choose your model and add the option codes listed above. See the example below for a 1000 x 1000 Glazed hatch electrically operated concealed motors, solar controlled and powder coated to RAL 9002.
SRHGE – ECM/SOLAR/RAL9002-100.100

If in doubt give our sales team a call on 01922 711185 or use the mail form on our website to contact us.

GLAZED ACCESS SOLUTIONS













THERMAL BREAK

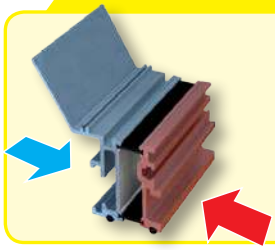

ODP







pavevent

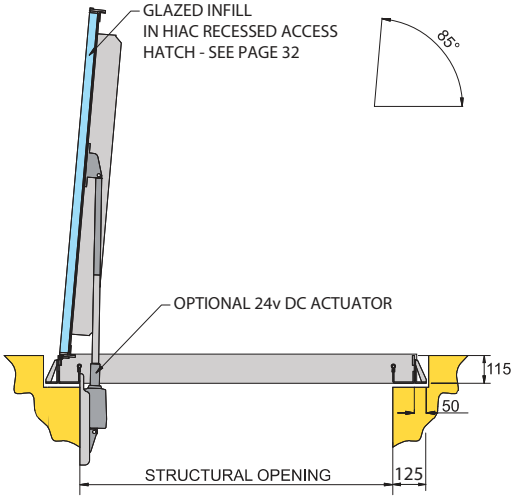





GWO - WALK ON GLASS

Surespan walk on glass access hatches are produced in a HIAC frame as detailed on pages 32 and 33. Operation as standard is by stainless steel gas spring assisted lift with hydraulic or electric lifting options available. Domestic loading at 1.4 kN concentrated and 1.5 kN/m² UDL and a U value of 5.4W/m²K.



CUSTOM MADE TO ANY SIZE

WALK ON GLAZED



HOW TO SPECIFY & ORDER

Choose your model and add the option codes listed on pages 84 and 85, see the example below for a 1000 x 1000 Walk on glazed access hatch pedestrian loading with concealed gas springs and powder coated to RAL 9002.
GWO – A/GSC/RAL9002-100.100

If in doubt give our sales team a call on 01922 711185 or use the mail form on our website to contact us.

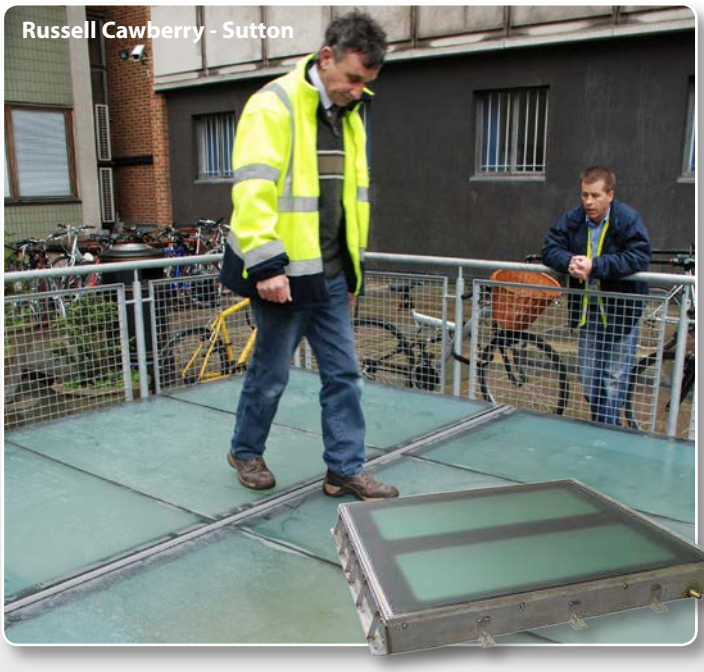

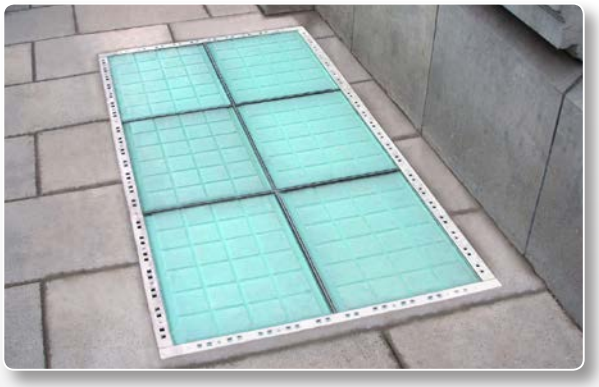

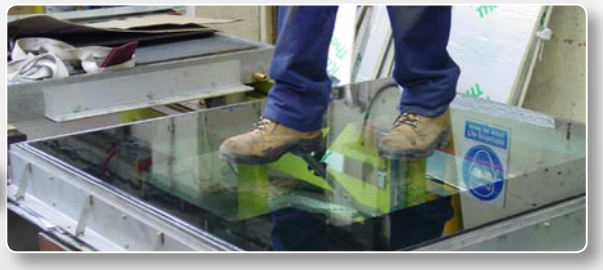

BOXED GLAZED FLOOR ACCESS SOLUTIONS

Surespan boxed glazed rooftop access features 35.5mm sealed double glazed unit and are custom made to any size.



Putney Bridge Road - London



Downtown Doha - Qatar



Circle Bath Hospital - Bath



Boxed Glazed Rooflight with fixed section - London

SURESPAN

FLOOR ACCESS


The Balancing Barn

FLOOR ACCESS

Surespan SAC and HIAC Floor Access covers are designed to cover a wide range of applications and finishes, from patterned tread plate to carpet or vinyl tiles, through to recess for timber, ceramics, concrete or walk-on glass.

Featuring gas spring assisted operation, these access covers allow fingertip opening of the lid.

Floor Access Covers are designed to take loadings of up to 16 tonnes (FACTA Class E for vehicular traffic in off-street locations).



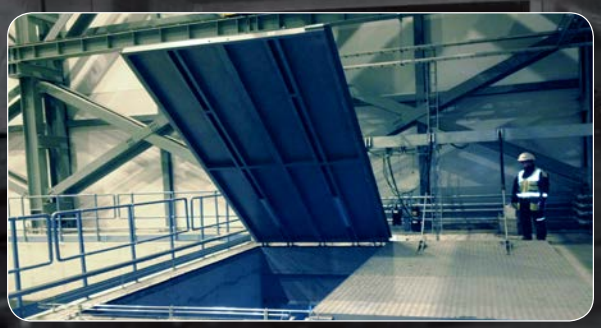

RECESSED

30 HIAC RECESSED

For internal or external use with a variety of infill



FLUSH

36 SAC FLUSH ACCESS HATCH

Pedestrian to FACTA Class E rating

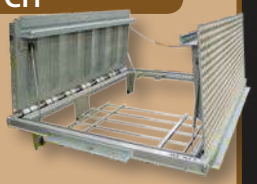

40 ENDURANCE HEAVY DUTY

For use in non traffic areas



UPSTAND

42 RSI UPSTAND

For use in non traffic areas



44 FLOOR DUCTING

Fast and easy to install modular floor ducting.

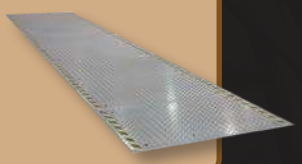











	Comparisons***		GLW	Wheel Loads		Load Test Data	
FACTA Class	**EN124 Class**	**BS497 approx. equivalent class**	**Gross Laden Vehicle Weight**	**Wheel Loads ** (Slow Moving pneumatic)**	**Wheel Loads ** (Slow Moving solid)**	**Acceptance Test (Static Wheel Load plus overload & dynamic effects)**	**Strength Test (Acceptance Test load plus ultimate safety factor)**
A Pedestrian	A15	C	Pedestrian Duty	0.6 tonne (5kN)	N/A	5.0 x 1.0 x 1.0 = 5.0kN	5.0 x 1.6 = 8.0kN
AA Domestic driveways	N/A	N/A	5 Tonne	1.5 tonne (15kN)	N/A	15.0 x 1.1 x 1.15 = 19.0kN	19.0 x 1.6 = 31.0kN
AAA Light Pallet Trucks	N/A	N/A	10 Tonne	2.5 tonne (25kN)	0.5 tonne	25.0 x 1.1 x 1.15 = 32.0kN	32 .0 x 1.6 = 52.0kN
B Pick Up Trucks	B125	B	Up To 44 Tonne *	5.0 tonne (50kN)	0.75 tonne	50.0 x 1.1 x 1.15 = 63.25kN	63.25 x 1.6 = 101.0kN
C Industrial plants	C250		Up to 44 tonne but under special conditions *	6.5 tonne (65kN)	1.0 tonne	65.0 x 1.1 x 1.15 or 50.0 x 1.1 x 1.5 = 82.5kN	82.5 x 1.6 = 132.0kN
D Fast Moving HGV's	D400	D	Up to 44 tonne but under special conditions *	11.0 tonne (108kN)	3.0 tonne	108.0 x 1.1 x 1.15 or 50.0 x 1.1 x 2.5 = 137.5kN	137.5 x 1.6 = 220.0kN
E Heavy Duty Forklifts	E600	N/A	Special application vehicles	16.0 tonne (158kN)	5.0 tonne	158.0 x 1.1 x 1.15 = 200.0kN	200.0 x 1.6 = 320.0kN
F Airfields	F900	N/A	Special application vehicles	24.0 tonne (237kN)	N/A	237.0 x 1.1 x 1.15 = 300.0kN	300.0 x 1.6 = 480.0kN

*Under the "Road Vehicles (Authorised Weight) Regulations 1998", Axle weights for the UK are limited to 11.5 tonnes maximum 'Refer to' Acceptance Test for maximum design load/load bearing capacity.
**Slow moving wheel loads are deemed to be speeds no greater that 20mph.
***These comparisons are indicative of the typical suitable area of application of each product call and are not like for like performance comparison. Comparisons are for guidance only and are not intended to be exact.
Information correct March 2013.



HIAC - FLOOR ACCESS

Surespan HIAC recessed access hatches have a pan type door and can be recessed from 3mm to 100mm. The hatches are rated from FACTA class A-E. The hatches are manufactured from aluminium or stainless steel and operated by either stainless steel gas springs, 24v DC actuators or hydraulics.

This access hatch type is not watertight, if a self draining cover is required please specify. Any water passing the seals will be dispersed via an integral drainage channel, which is fitted with an optional internal or external ¾ inch flexible hose adaptor (for connection to drain by others).

As part of the initial enquiry the weight of the infill must be advised to enable us to determine the method of operation.

HIAC Access Cover - Single Leaf

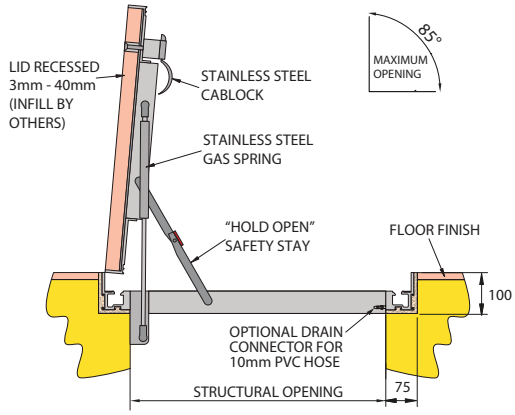

HIAC Access Cover - Double Leaf

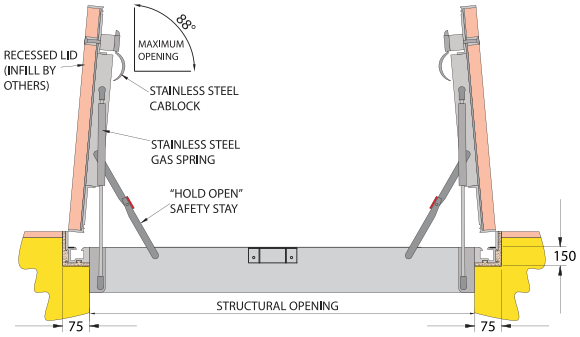

OPTIONAL FEATURES

	OPTION CODE
• Retractable safety grid	SG
• Retractable hand hold	RH
• Retractable single pole	RP
• Retractable protection covers	RPC
• Drainage connection	DC
• Powder coated (RAL colours)	PC/RAL (Underside only)
• SUREGRIP® Non slip coating	SGRIP
• Viewing window	VW
• Electric	E
• Hydraulic (for larger hatches)	HYD
• Stainless steel	SS304 or SS316
• Stainless steel trim	SST
• Loading	A-F See FACTA table page 29
• Acoustic to Rw45dB	45dB
• Fire rating	FR60, FR120, FR180
• Internal pull handle	IPH
• SureGuard handrail	SURG

LOCKING OPTIONS



L03 - Tee lock Standard method of opening lid from above. Stainless steel plug protects internal cab lock keyway.



LB - Locking padlock box Integral locking box for additional security.



EIM - Electrical interlock (Micro switch) When remote alarm indication or automatic light switching is required.



SB - Shoot bolt lock Internal only.



CAML - Cam lock Additional locking device to ensure positive sealing.



ELB - Electrical locking box For additional security when linked to a BMS system.



L07C - Concealed dead lock Key or thumb turn opening with cover plate.



PRH - Emergency panic release handle

CUSTOM MADE TO ANY SIZE

STANDARD SIZES

PRODUCT Ref	SIZE
HIAC 60.60	600 x 600
HIAC 75.75	750 x 750
HIAC 90.75	900 x 750
HIAC 90.90	900 x 900
HIAC 100.100	1000 x 1000
HIAC 120.120	1200 x 1200
HIAC 120.180	1200 x 1800
HIAC 150.150	1500 x 1500

WOOD/TILE INFILL RECESSED ACCESS





Coppice Performing Arts School - Wolverhampton



Leisure Centre - Manchester



Art Gallery - Middlesborough



Wine Cellar - Great Barr



Plant Access - Swindon



Hot Tub Cover - Sutton Coldfield

TILE/TERRAZZO





CASE STUDIES

The Balancing Barn





Yale University



Residential House - London



STONE/GRANITE


Liffey Service Tunnel - Dublin






Paddington station


Presidential Palace - Abu Dhabi


Residential House - Solihull


Queens Square - Crawley

STONE/GRANITE

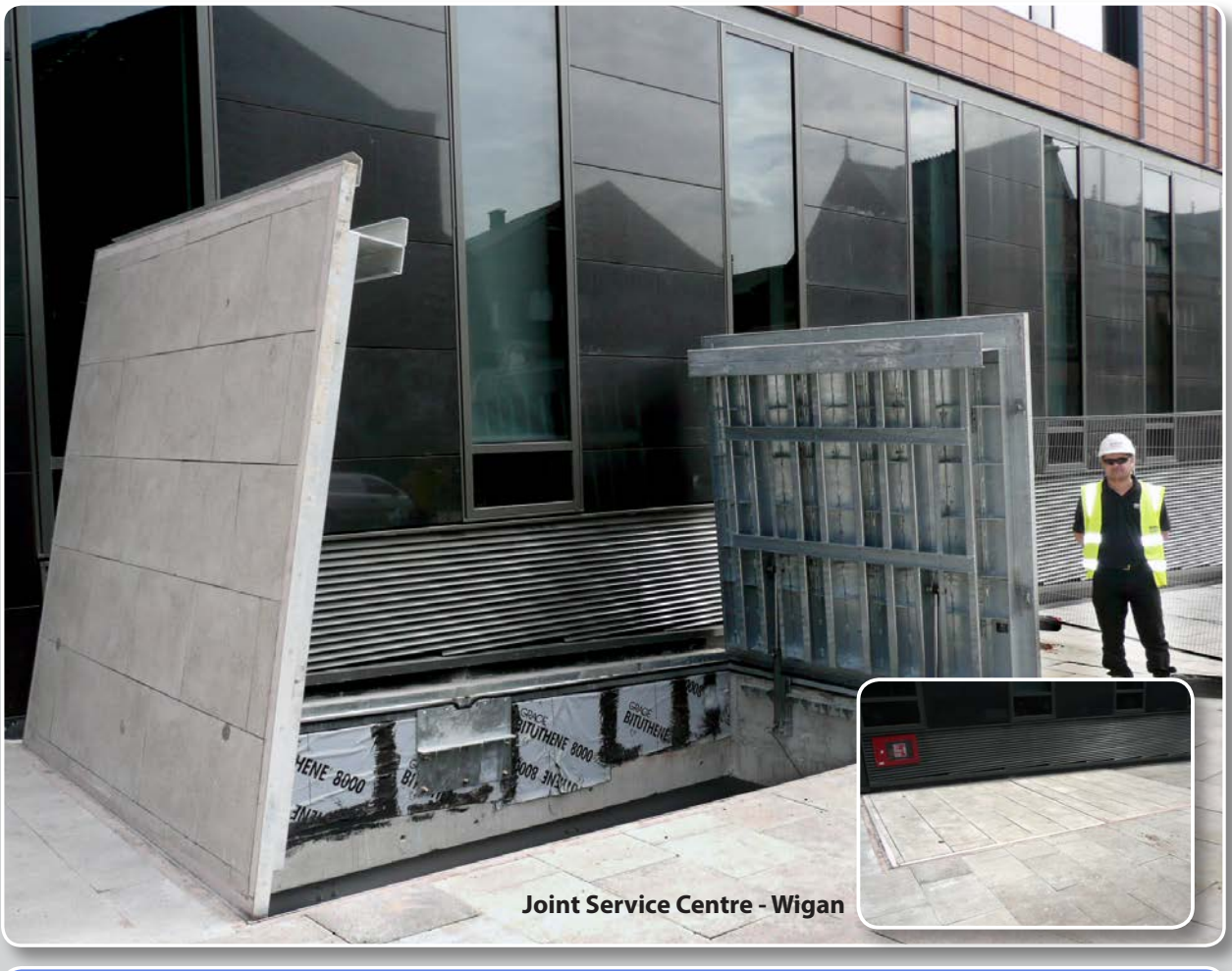

Joint Service Centre - Wigan



Car Park Escape Hatches - Stockholm

STONE/GRANITE



Liffey Service Tunnel - Ireland

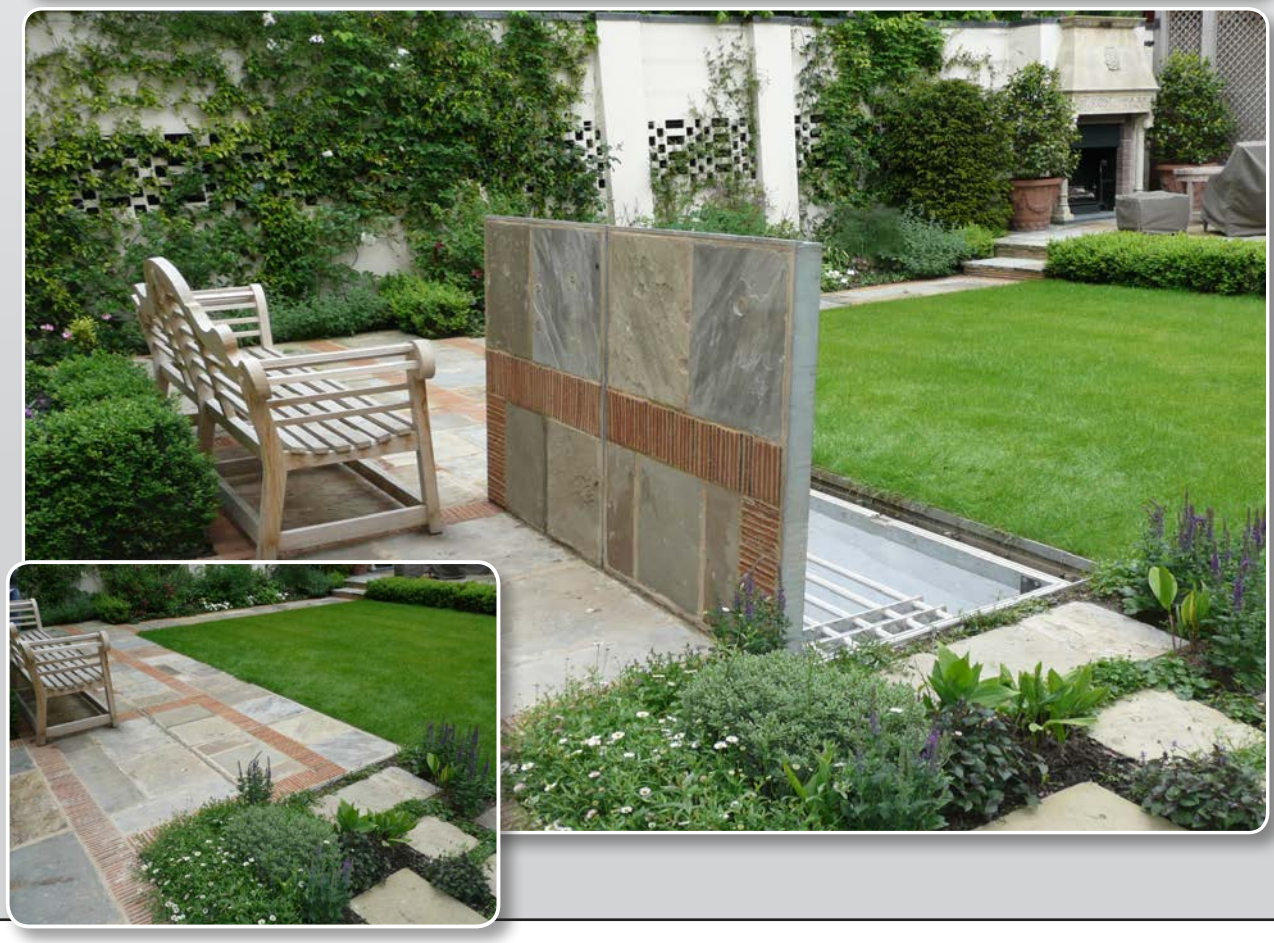

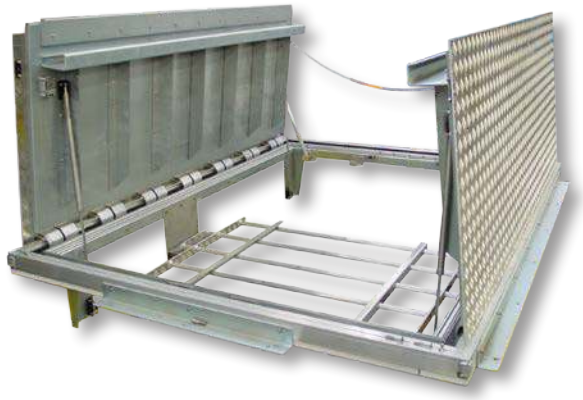

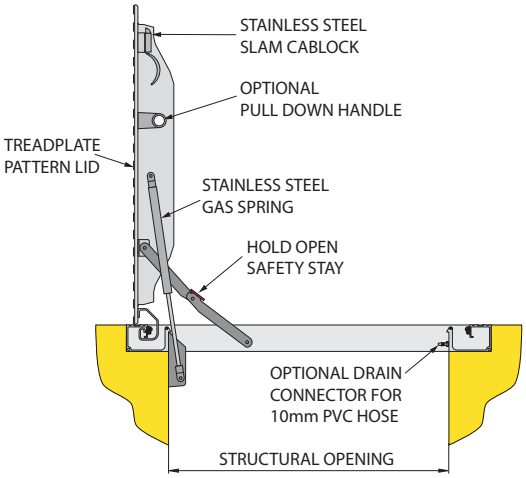

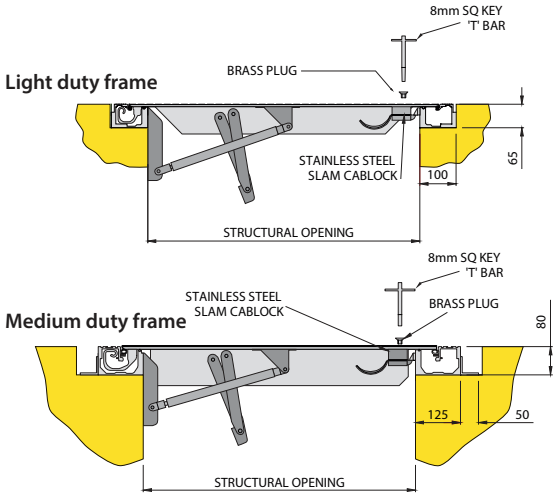

SAC - FLUSH ACCESS

Surespan type SAC Heavy Duty Access Covers are designed to be rated up to Facta Class E for vehicular traffic in off-street locations. The lids are manufactured in aluminium. The aluminium hatches can take loadings from 5 to 19 tonnes (FACTA class B to E) and are available in standard single and double leaf sizes, see the chart on page 29.

LOCKING OPTIONS



L03 - Tee lock Standard method of opening lid from above. Stainless steel plug protects internal cab lock keyway.



LB - Locking padlock box Integral locking box for additional security.



EIM - Electrical interlock (Micro switch) When remote alarm indication or automatic light switching is required.



SB - Shoot bolt lock Internal only.



CAML - Cam lock Additional locking device to ensure positive sealing.



ELB - Electrical locking box For additional security, linked to a BMS system.



L07C - Concealed dead lock Key or thumb turn opening with cover plate.



PRH - Emergency panic release handle

CUSTOM MADE TO ANY SIZE

OPERATION - SEE PAGE 50

HYDRAULIC



HYD

PNEUMATIC



PN

ELECTRIC



E

SOLAR

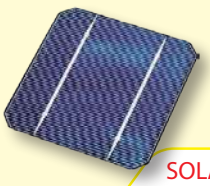

SOLAR

STANDARD SIZES

PRODUCT Ref	SIZE			WEIGHT
SAC 60.60	600	x	600	33 kg
SAC 75.75	750	x	750	43 kg
SAC 90.75	900	x	750	47 kg
SAC 90.90	900	x	900	53 kg
SAC 100.100	1000	x	1000	61 kg
SAC 120.120	1200	x	1200	77 kg
SAC 120.180	1200	x	1800	102 kg
SAC 150.150	1500	x	1500	104 kg

HOW TO SPECIFY & ORDER

Choose your model and add the option codes listed above, see the example below for a 1000 x 1000 Flush access cover, pedestrian loading, retractable safety grid, drainage connector and powder coated to RAL 9002. SAC – A/SG/DC/RAL9002-100.100

If in doubt give our sales team a call on 01922 711185 or use the mail form on our website to contact us.

OPTIONAL FEATURES

	OPTION CODE
• Retractable safety grid	SG
• Retractable hand hold	RH
• Retractable single pole	RP
• Retractable protection covers	RPC
• Drainage connection	DC
• Powder coated (RAL colours)	PC/RAL
• SUREGRIP® Non slip coating	SGRIP
• Viewing window	VW
• Electric	E
• Hydraulic (for larger hatches)	HYD
• Stainless steel	SS304 or SS316
• Loading	A-F See FACTA table page 29
• Ventilated upstand	VU
• Acoustic to Rw45dB	45dB
• Fire rating	FR60, FR120, FR180
• Internal pull handle	IPH
• Emergency panic release handle	ERH
• SureGuard handrail	SURG

CUSTOM MADE TO ANY SIZE

SPECIAL PROJECTS

Surespan manufactured and supplied a floor hatch to enable a Finnish energy company to access their biomass pit at their new energy plant in Lithuania. The 5000 x 5000mm hydraulically operated, double leaf hatch was designed to be easily operated by an electrically driven pump power pack.

Access was required for a grab crane to gain easy access to the biomass fuel store. Surespan worked with engineering consultants AF Consult to come up with an effective solution.









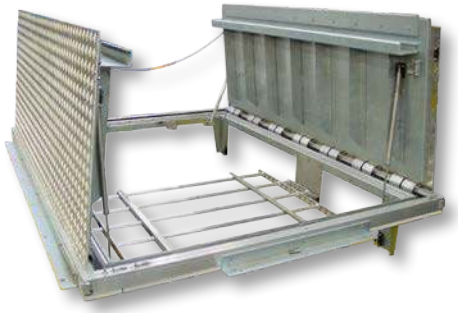



SUREGRIP® HOT APPLIED



SUREGRIP is specifically designed for permanent markings on all roads, highways, car parks and playgrounds.

SUREGRIP can be customized for any application, logo or signature which can be provided in a range of colours.

SUREGRIP

SAC SOLUTIONS





SAC SOLUTIONS

Open Mesh Lid

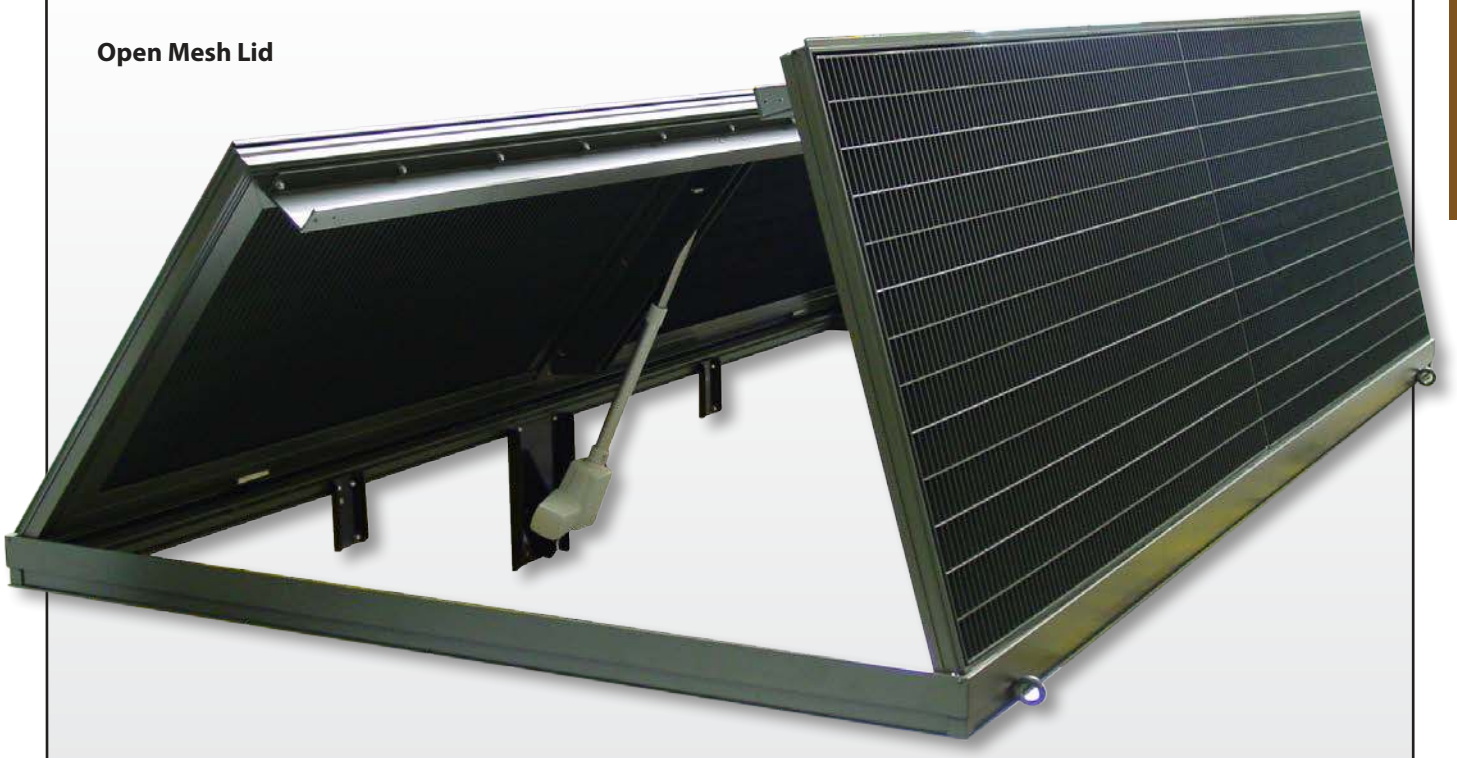

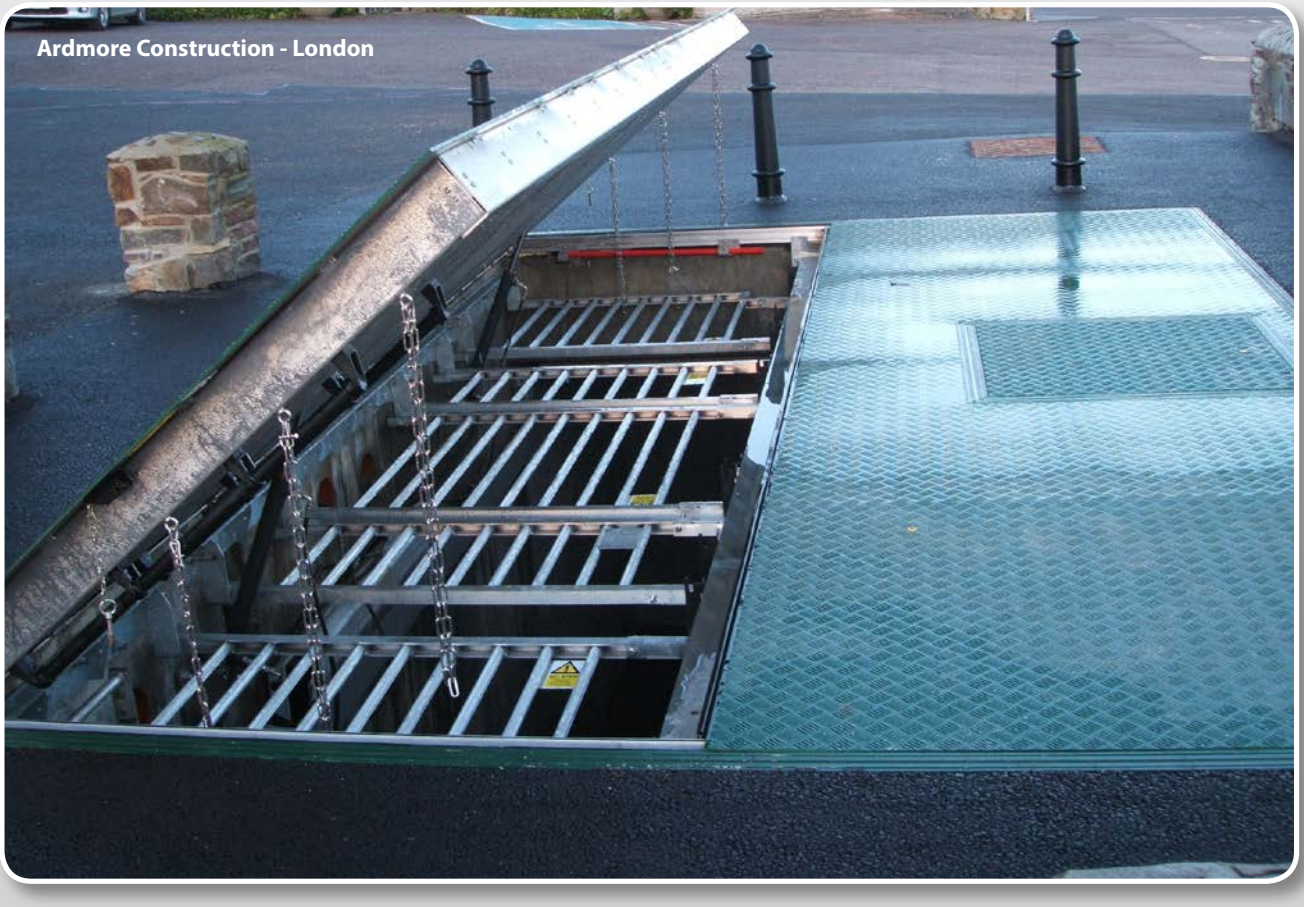

Ardmore Construction - London

FLOOR ACCESS - STANDARD EHDC SAC



ENDURANCE HEAVY DUTY

Surespan Endurance Heavy Duty Access Covers are designed to be rated up to Facta Class E for vehicular traffic in off-street locations. The lids are manufactured in cast aluminium alloy. The aluminium alloy hatches can take loadings from 5 to 19 tonnes (FACTA class B to E) and are available in standard single, double and multi leaf configurations.

ALL SIZES IN STOCK

SINGLE LEAF

Structural Opening			Weight
600	x	600	28kg
750	x	750	34kg
750	x	900	38kg
900	x	900	42kg
1000	x	1000	47kg



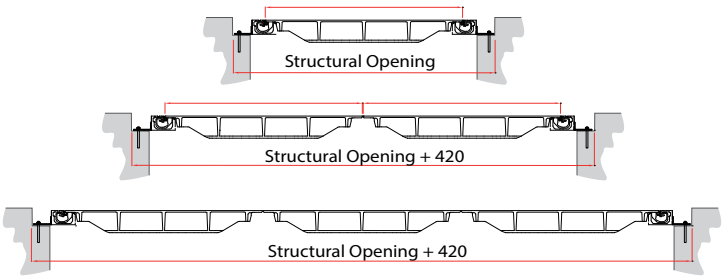

COMBINE SINGLE LEAF SIZES TO CREATE LARGER COMBINATIONS

DOUBLE LEAF

Structural Opening			Weight
600	x	1321	150kg
750	x	1621	180kg
900	x	1321	190kg
900	x	1921	210kg
1000	x	2121	240kg



TRIPLE LEAF

Structural Opening			Weight
600	x	2042	225kg
750	x	2492	270kg
600	x	2942	285kg
900	x	2942	315kg
1000	x	3242	360kg



QUAD LEAF

Structural Opening			Weight
1321	x	1321	300kg
1621	x	1621	360kg
1321	x	1921	380kg
1921	x	1921	420kg
2121	x	2121	480kg



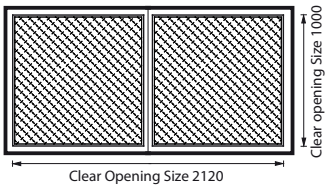

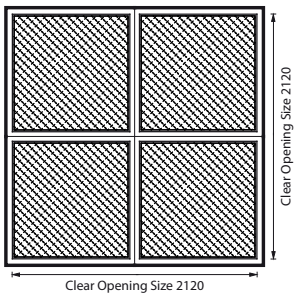

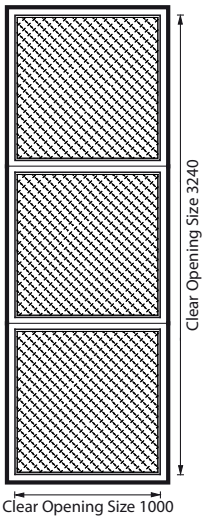

HOW TO SPECIFY & ORDER

Choose your model and add the option codes listed above. See the example below for a 1000 x 1000 E-Class heavy duty access cover, FACTA Class - D loading, retractable safety grid, drainage connector and powder coated to RAL 9002.
EHDC – D/SG/DC/RAL9002-100.100

If in doubt give our sales team a call on 01922 711185 or use the mail form on our website to contact us.

FLOOR ACCESS - STANDARD EHDC SAC

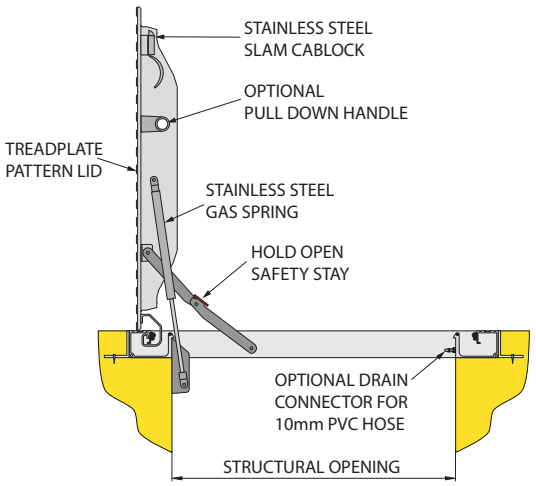


Mecca Air Duct Access- KSA

Heavy duty frame

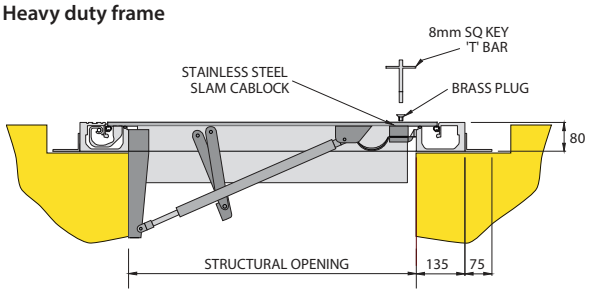









SUREGRIP® HOT APPLIED

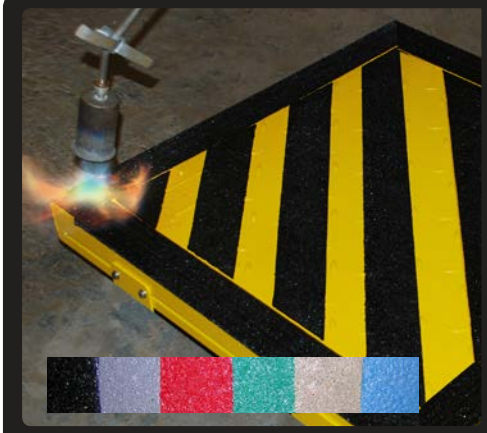

SUREGRIP is specifically designed for permanent markings on all roads, highways, car parks and playgrounds.

SUREGRIP can be customized for any application, logo or signature which can be provided in a range of colours.

SUREGRIP



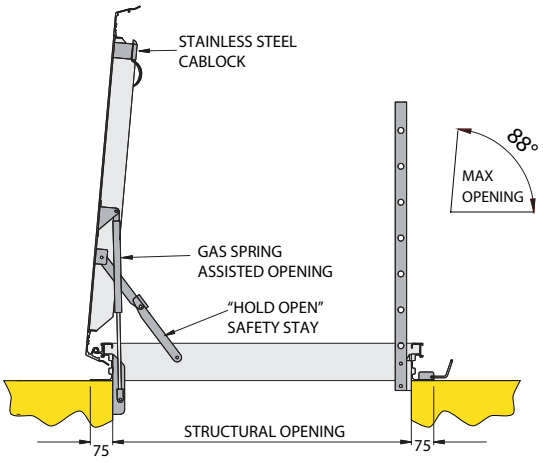

Lite Frame

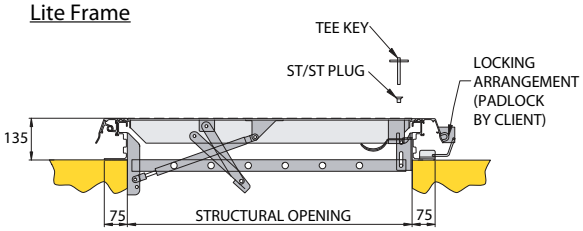

Medium Frame

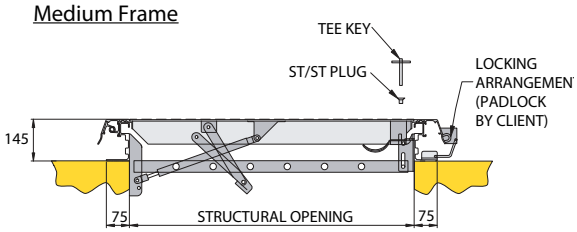

RSI - UPSTAND ACCESS

SURESPAN type RSI Upstand aluminium upstand access covers are rated at 2.5 kN/m² loading. The cover comes complete with stainless steel gas spring assisted high grade magnesium alloy tread plate lid which locks in the open position with a safety hold open stay to prevent against accidental closure. A stainless steel slam action cablock as illustrated is fitted as standard to lock the lids. These locks are easily opened from the inside and Tee key operated from the outside. Other locking provisions including locking boxes and electrical interlock which are available on our options list. The patent marine alloy frame with unique hinges incorporate a double unbroken EPDM seals to help prevent the ingress of dirt and moisture.

OPTIONAL FEATURES

	OPTION CODE
• Retractable safety grid	SG
• Retractable hand hold	RH
• Retractable single pole	RP
• Drainage connection	DC
• Powder coated (RAL colours)	PC/RAL
• SUREGRIP® Non slip coating	SGRIP
• Viewing window	VW
• Electric	E
• Hydraulic (for larger hatches)	HYD
• Stainless steel	SS304 or SS316
• Ventilated upstand	VU
• Acoustic to Rw45dB	45dB
• Fire rating	FR60, FR120, FR180
• Internal pull handle	IPH
• SureGuard handrail	SURG

LOCKING OPTIONS



L03 - Tee lock Standard method of opening lid from above. Stainless steel plug protects internal cab lock keyway.



LB - Locking padlock box Integral locking box for additional security.



EIM - Electrical interlock (Micro switch) When remote alarm indication or automatic light switching is required.



SB - Shoot bolt lock Internal only.



CAML - Cam lock Additional locking device to ensure positive sealing.



ELB - Electrical locking box For additional security when linked to a BMS system.



L07C - Concealed dead lock Key or thumb turn opening with cover plate.



LSHS - Shrouded hasp & staple for padlock by others.

CUSTOM MADE TO ANY SIZE

STANDARD SIZES

PRODUCT Ref	SIZE	WEIGHT
RSI 60.60	600 x 600	34 kg
RSI 75.75	750 x 750	45 kg
RSI 90.75	900 x 750	50 kg
RSI 90.90	900 x 900	56 kg
RSI 100.100	1000 x 1000	64 kg
RSI120.120	1200 x 1200	81 kg
RSI 120.180	1200 x 1800	109 kg
RSI 150.150	1500 x 1500	111 kg

HOW TO SPECIFY & ORDER

Choose your model and add the option codes listed above, see the example below for a 1000 x 1000 with a 140 high upstand, retractable safety grid, ventilated upstand and powder coated to RAL 9002. RSI – 140/SG/VU/RAL9002-100.100

If in doubt give our sales team a call on 01922 711185 or use the mail form on our website to contact us.

UPSTAND SOLUTIONS









SPECIAL APPLICATIONS











FD - FLOOR DUCTING

Fast and easy to install - the modular nature of this system allows for prefabricated sections and corners to be made up.
No pre-drilling - profile design allows the locating nuts for floor plate to slide along its full length, accommodating discrepancies in the floor plate drilling centres.
Moveable anchor points - profile design allows the anchor lugs to be moved to any point along a length of the section accommodating inaccuracies in pre-cast pockets and easily allows the addition of extra lugs if required.
Cost effective - the flexibility of the system, together with its ease of installation drastically reduces time, when compared to traditionally fabricated systems. It also eliminates fabrication errors and expensive mistakes on site.

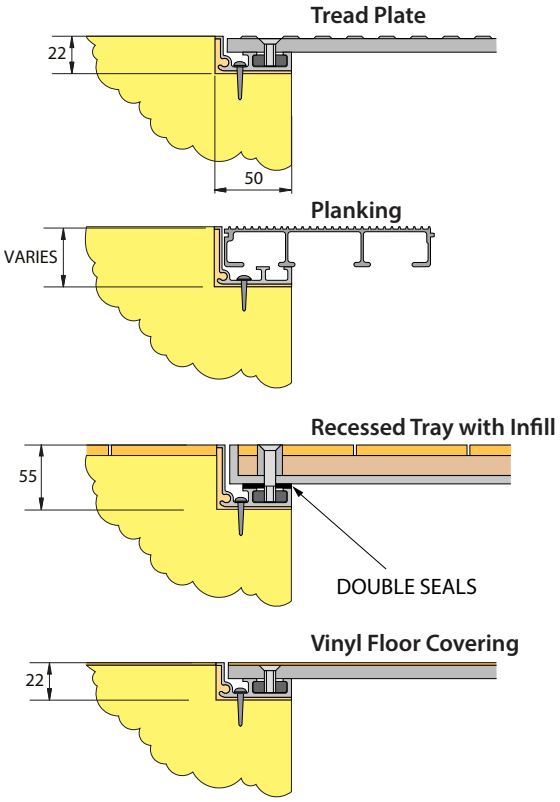

OPTIONAL FEATURES

	OPTION CODE
• Loading	A-F See FACTA table page 29
• SUREGRIP® Non slip coating	SGRIP
• Stainless steel	SS304 or SS316
• Fire rating	FR60, FR120, FR180
• Acoustic to Rw45dB	45dB
• Watertight	WT

CUSTOM MADE TO ANY SIZE

Illustrated are standard 90°, 180° and 135° corner joints. Special inserts are available at any angle to connect two lengths of curbing as required - the curbing is simply mitred and fitted together. Special clips for individual situations can be supplied for a variety of purposes.



FLOOR DUCTING SOLUTIONS

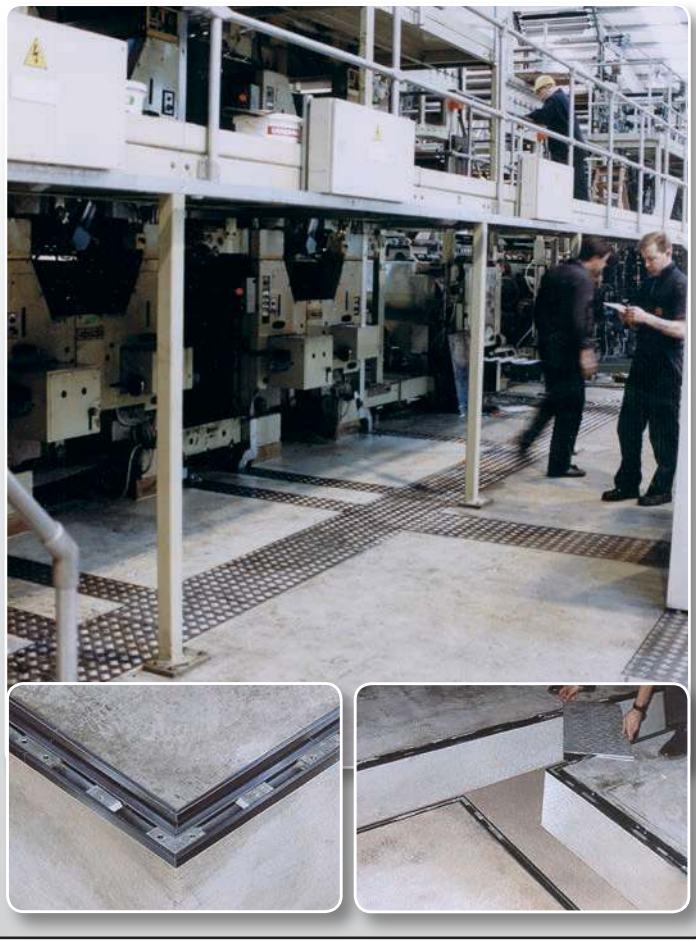

FLOOR DUCTING SOLUTIONS



Coppice Performing Arts School Example layout

SUREGRIP®



SUREGRIP is specifically designed for permanent markings on all roads, highways, car parks and playgrounds.

SUREGRIP can be customized for any application, logo or signature which can be provided in a range of colours.



INSTALLATION

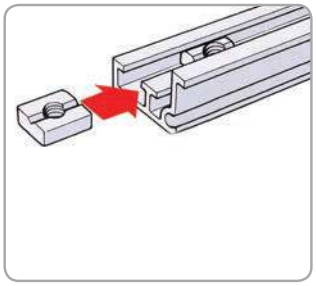

1. Slide retaining lugs and special nut sections into curbing.

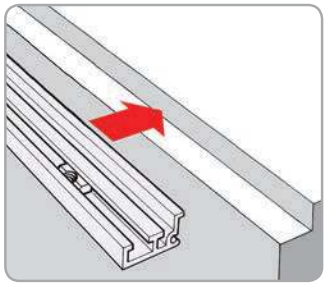

2. Offer curbing to rebate.

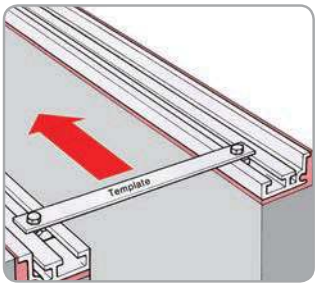

3. Check alignment with template as shown and grout complete curbing assembly in position.

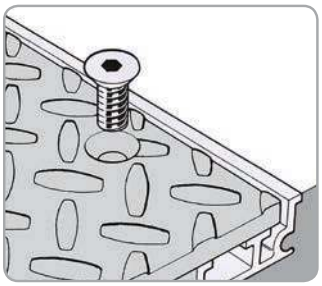

4. Position flooring plates, align nuts with predrilled flooring plates and bolt flooring down.

SURESPAN

BIOMASS FUEL DOORS

Biomass Fuel Doors

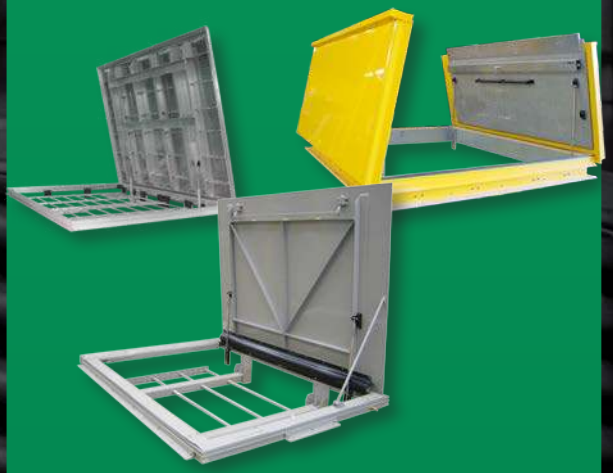

BIOMASS FUEL DOORS

Surespan designs and supplies Biomass Fuel Doors to a variety of designs to suit a variety of applications. Biomass Fuel Doors can be operated either manually, hydraulically or electrically and are manufactured in aluminium for single or double leaf upstand access covers are rated at 5kN/m ^{2} loading or flush floor doors capable of taking traffic loadings up to FACTA class E. See load chart on page 29. The patent marine alloy frame incorporates a single or double unbroken EPDM seal, to help prevent the ingress of dirt and moisture, offering water and near airtight seal. Vented, insulated and airtight options are available.

Biomass Fuel doors can be manufactured to include an anti slip surface, available in a range of colours. Please see our Suregrip option for further details.

Surespan Ventilators with micro mesh filters are also available.

SAC BIOMASS

48 SAC FLUSH BIOMASS HATCH

SAC in use for traffic areas - See SAC section for full specification details



49 RSI UPSTAND BIOMASS HATCH

RSI upstand used for non traffic areas - See RSI section for full specification details











Criminal Justice Centre - Northampton







Hinton Ampner - Hampshire

Biomass
Fuel Doors



SAC BIOMASS FLUSH - WHEEL LOADING

SAC for use in off street traffic areas

OPTIONAL FEATURES

	OPTION CODE
• Hatch with Flush internal skin	FIS
• Electric	E
• Hydraulic (for larger hatches)	HYD
• Loading (SAC only)	A-F See FACTA table page 29
Viewing window	VW
• Ventilated upstand	VU
• Powder coated (RAL colours)	PC/RAL
• SUREGRIP® Non slip coating	SGRIP
• Acoustic to Rw45dB	45dB
• Fire rating	FR60, FR120, FR180
• Drainage connection	DC
• SureGuard Handrail	SURG

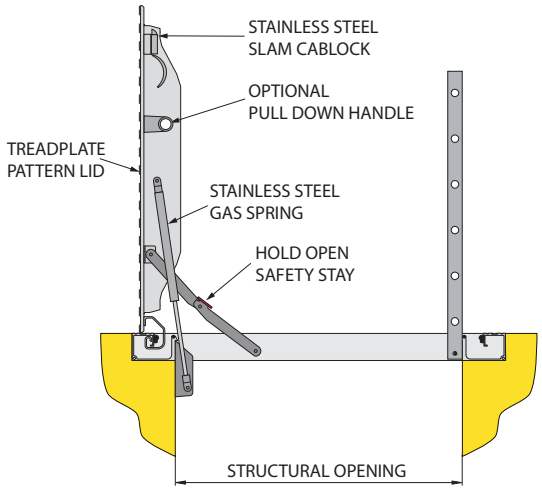

CUSTOM MADE TO ANY SIZE

OPERATION

HYDRAULIC



HYD

ELECTRIC



E

PNEUMATIC



PN

BIOMASS PROJECT

Finnish energy group Fortum - Lithuania

Double leaf upstand access hatch (2 x 2500 x 5000) with tread plate top, operated by external hydraulic cylinders with vertical support towers in mild steel and hand pump.

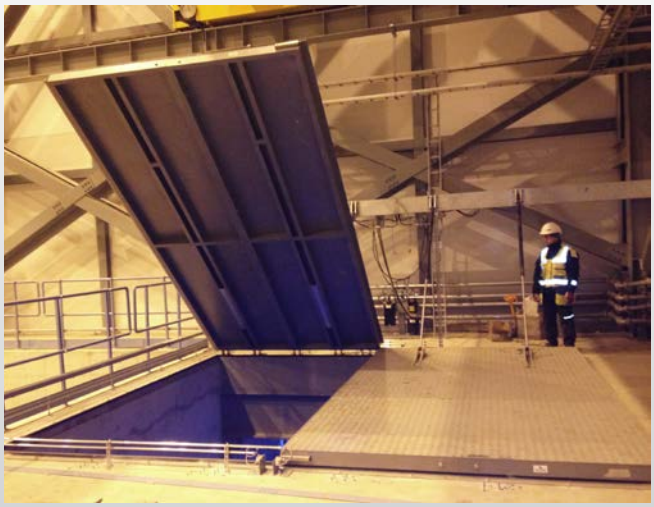



RSI BIOMASS UPSTAND

RSI upstand used for non traffic areas

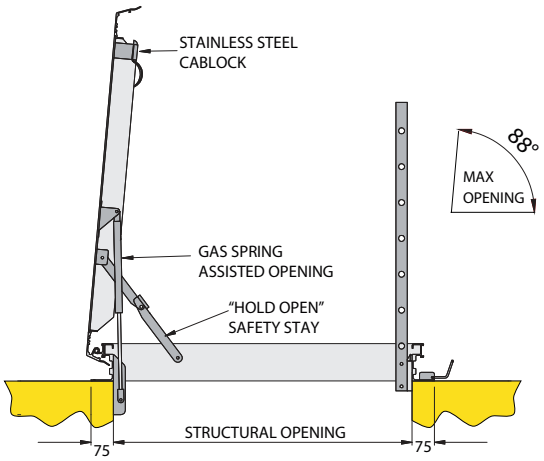

Biomass
Fuel Doors

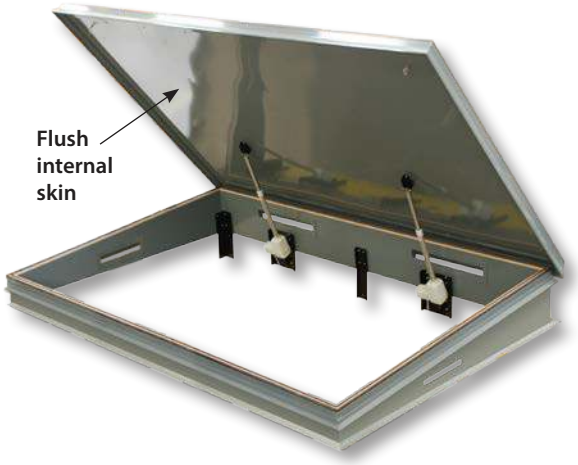

BIOMASS

Surespan RSI and SAC aluminium single or double leaf flush or upstand access covers are rated at 5kN/m² up to a maximum of Facta class E loading. Surespan Biomass covers can be manufactured to include Suregrip anti slip surfacing, available in a range of colours.









SURESPAN

LADDERS



LADDERS

Surespan ladders are designed specifically for use where safe, vertical access is required.

The standard designs of the ladder together with the range of accessories give specifiers flexibility and choice. All ladders and fire escapes comply with relevant building regulations or safety standards.

Surespan access ladders can be powder coated to match the façade of the building.



LADDERS

52 STANDARD LADDERS

Standard access ladders



54 SHIPS LADDERS

Ships access ladders



56 ZIP LADDERS

Zip 4-7
Zip 8



60 DROPDOWN LADDERS

Drop down safety ladders


















DROP DOWN
LADDER



SL ACCESS LADDERS

Surespan SLC/RS Standard Ladder with retractable counter balanced lower section. Stringers from size 8 structural tube (48.3 o/d) set 400 apart with Surespan safegrip serrated rungs at 250 centres. Cage from 50 x 5 flat hoops set at a maximum 900 centres with 6 no. vertical straps with caged nuts. Cage will be extended from 2.4m from the ground level. Stays will be positioned at a maximum of 2400 centres.

SLC/RS - Retractable Lower Section
The retractable SureSlide mechanism allows the lower section to slide up and down with ease. The lower section can be released from the top of the ladder for escape from the roof. Operation from below can be accommodated. Polyester powder coating available to match the fabric of the building.

HOW TO SPECIFY & ORDER

Choose your model and add the accessory codes, see the example below for a 3000 standard access ladder with retractable handhold, 2000 long ladder guard and powder coated to RAL 9002.
SLC - RH/LG20/PCRAL9002-300

If in doubt give our sales team a call on 01922 711185 or use the mail form on our website to contact us.

ALTERNATIVE APPLICATIONS



SL
Standard Ladder

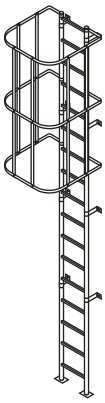

SLC
Standard Ladder with Cage



SL/WT
Standard Ladder with Walk Through

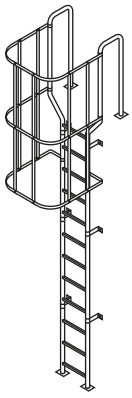

SLC/WT
Standard Ladder with Cage / Walk Through

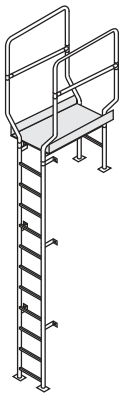

SL/PS - SLC/PS
Standard Ladder with Walk Through and Parapet Stepover Platform



SLC/RS
Standard Ladder and Cage with Retractable Lower Section

FEATURES/ACCESSORIES



SLC/WT LADDER CAGES Standard cages for ladders over 2.5m high or optional mesh lined cages are available for additional protection and security.



SLC/P LANDING PLATFORMS
Surespan landing platforms are recommended at 6m betweens platforms or landings.



SLC/SC
SECURITY CLOSURE
Surespan padlock security closure for caged ladders to prevent unauthorised entry onto the ladder.



SL/LG LADDER GUARD
The padlockable ladder guard designed to fit onto our SL ladders to prevent unauthorized use.
LG2 - 2m long, LG25 - 2.5m long.



SL/LGW LADDER GUARD WALL MOUNTED
The padlockable wall mounted ladder guard designed to fit over any existing ladder to prevent unauthorized use.
LG2 - 2m long, LG25 - 2.5m long.

LADDER SPECIFICATION SLC/WT

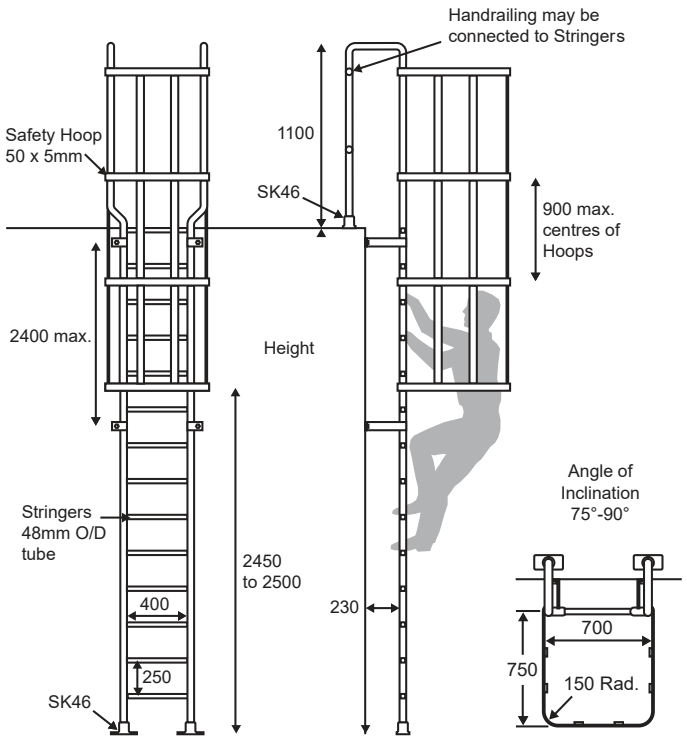

SUITABLE LADDER ANGLES

75⁰ - 90⁰	SL FIXED ACCESS
65⁰ - 75⁰	SHIP LADDERS
50⁰ - 65⁰	DANGER TO BE AVOIDED
30⁰ - 50⁰	STAIRCASES
15⁰ - 30⁰	TO BE AVOIDED
0⁰ - 15⁰	RAMPS



Typical detail of a SRH Roof Hatch with SLC/RH retractable hand hold

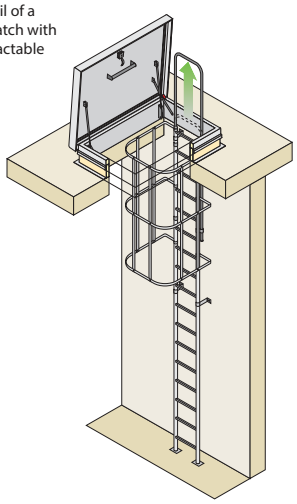

SLC/RH
RETRACTABLE HAND HOLD
The retractable hand hold provides an efficient and economic method of improving the safety and convenience of ladder access.



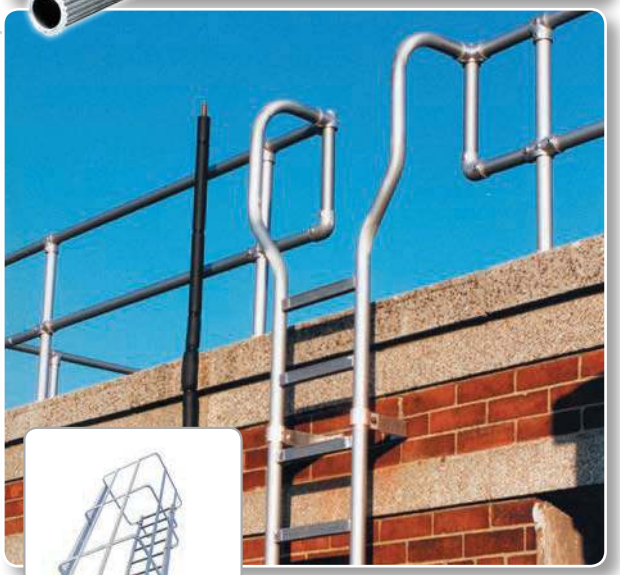





LADDER SPECIFICATION SHP

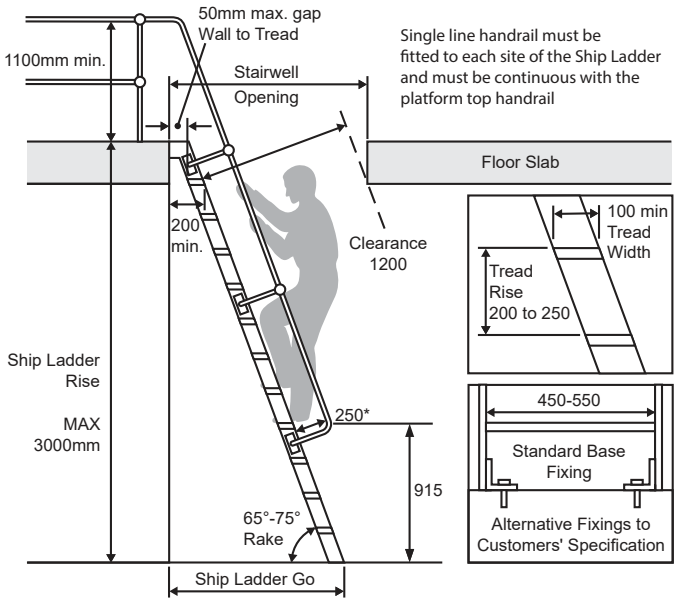

Min dimension between handrails 540mm
Rise 225mm to 255mm
Tread 100mm min. wide
*Handrail 250mm for 65°
100mm for 75°

LADDER SPECIFICATION SHP

SHP/S

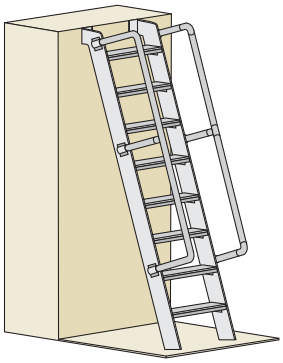

SHP/RP

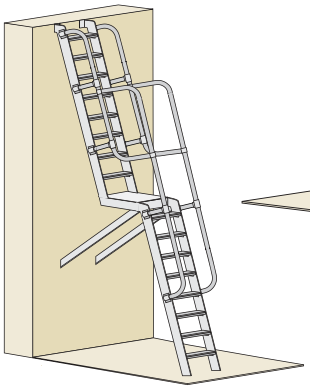

SHP/UO

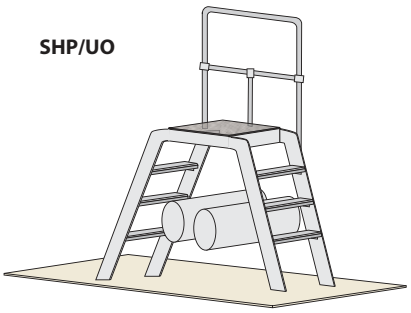

SHP/DL

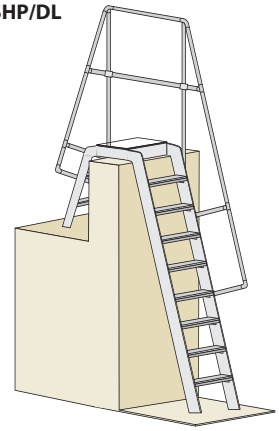

SHP/H

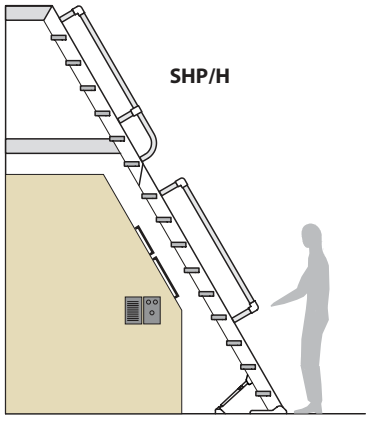

SHP/H

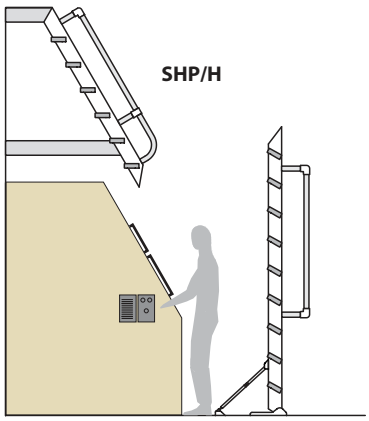

SHP/FAL - Fold away ladder

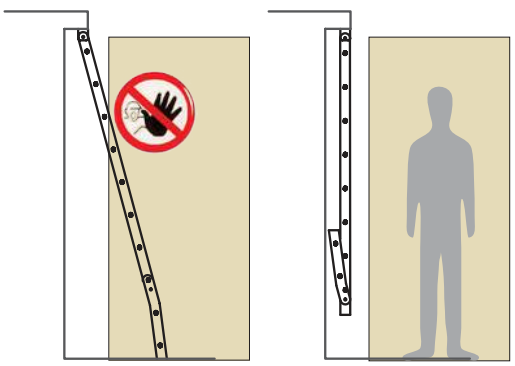

75⁰ - 90⁰	FIXED ACCESS
65⁰ - 75⁰	SHP SHIP LADDERS
50⁰ - 65⁰	DANGER TO BE AVOIDED
30⁰ - 50⁰	STAIRCASES
15⁰ - 30⁰	TO BE AVOIDED
0⁰ - 15⁰	RAMPS

SHIPS LADDER HEADROOM CLEARANCE
WITH DIFFERENT FLOOR DEPTHS

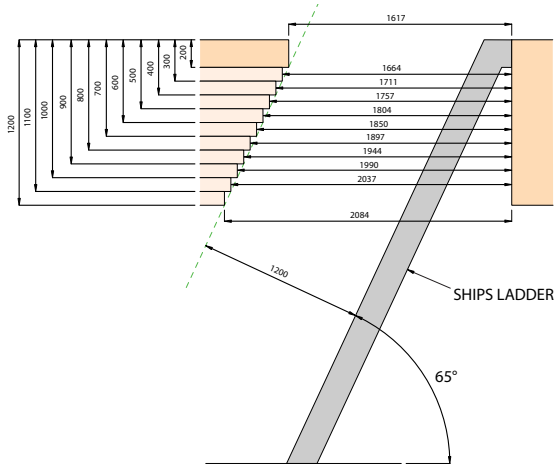

SHIPS LADDER WITH ROOF HATCH AND SIDE DOOR

Surespan Ships Ladders can be designed and supplied in conjunction with a top opening roof hatch with side door.

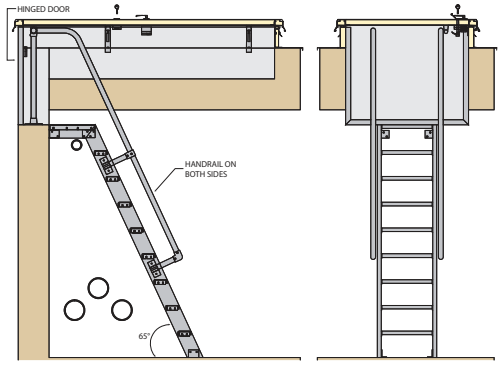

SHP ACCESS LADDERS

Surespan Ships Ladders SHP

Ships Ladders are manufactured from aluminium and are a cost effective proven access system compatible with Surespan 'SpeedKlamp' alloy handrail system. Ships ladders and safety rails can be supplied polyester powder coated to any standard RAL colour or with a mill finish. The ladders are designed for use in the 65° to 75° range. All Surespan access systems and fire escapes are designed in accordance with BS 5395: Part 3: 1985 and comply with relevant Building Regulations.
Consult our technical sales team who will design/specify your ships ladder.

Surespan Ships ladders for Safe vertical access.

- **Custom made to any size**
- **Range of accessories**
- **Safe Tread chequer plate aluminium treads**
- **Preformed stringers set 450 – 550 apart**
- **Treads at 250 centers**
- **Any RAL polyester powder coated finish**

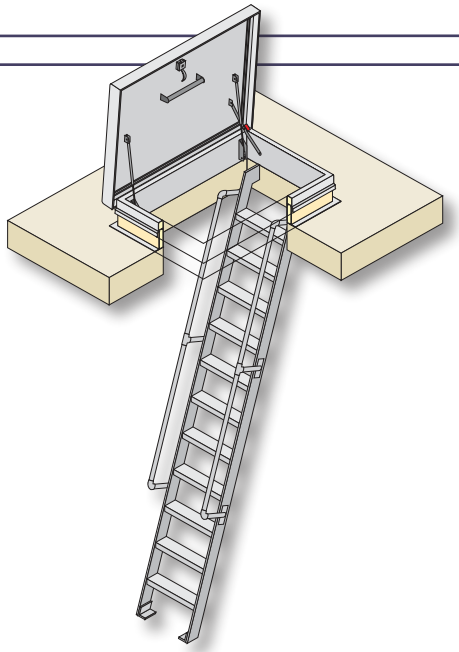









ZIP 4 - 7 RETRACTABLE LADDERS

Surespan's commercial heavy duty Zip ladders provide the simple solution to plant room access. Incorporating deep and wide anti-slip treads, a counterbalance spring action ensures that the stairway can be operated with a minimum of effort. Mounted on a headboard for easy installation. Maximum loading 200kg/tread or 500kg/m2 of the overall structure.

Surespan Zip ladders are tested and certified to EN 14975.

ZIP LADDER OPERATING DIMENSIONS

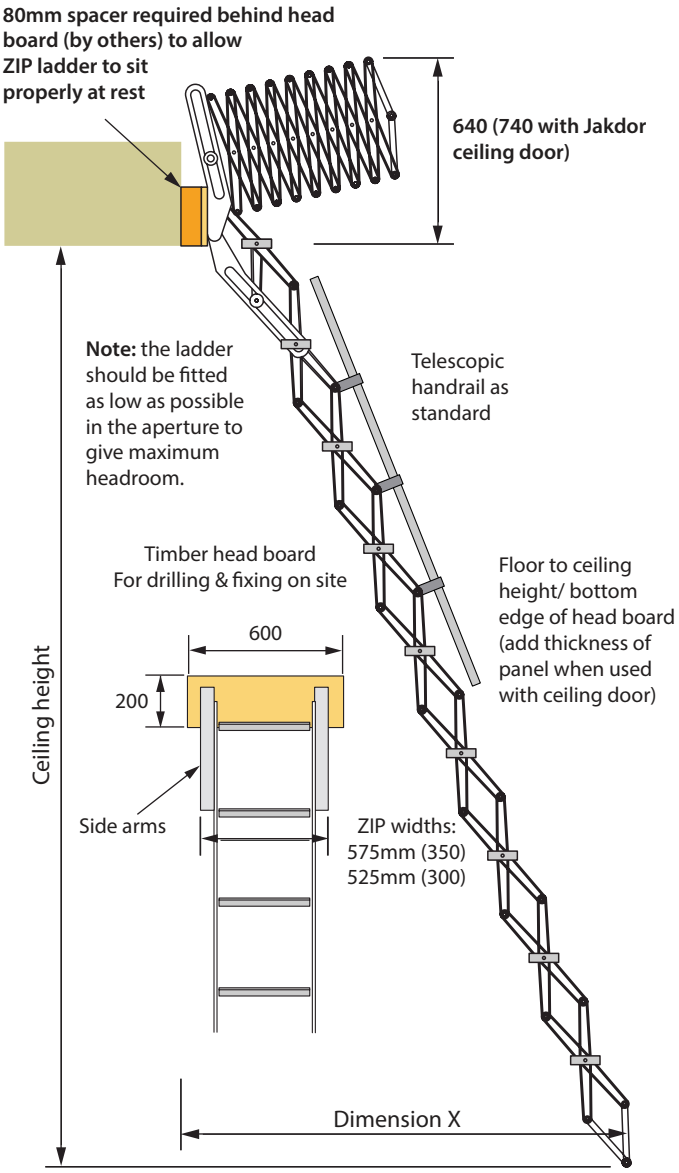

MODEL	CEILING HEIGHT	MEAN APERTURE WIDTH x LENGTH	DIM X	No. of Treads	WEIGHT (kg)
ZIP 4	Up to 2500mm	600 x 900mm	1210 - 1310mm	9	28
ZIP 5	2501 - 2790mm	650 x 900mm	1310 - 1410mm	10	30
ZIP 6	2791 - 3090mm	600 x 900mm	1410 - 1510mm	11	32
ZIP 7	3091 - 3390mm	650 x 950mm	1510 - 1610mm	12	34

Note: Add 50mm to allow for frame thickness of Jakdor ceiling door.
Customer to ensure the aperture size is large enough for their requirements.
All Treads size: 140 - 350mm

MINIMUM DISTANCE TO FIRST WALL MOUNTED RUNG

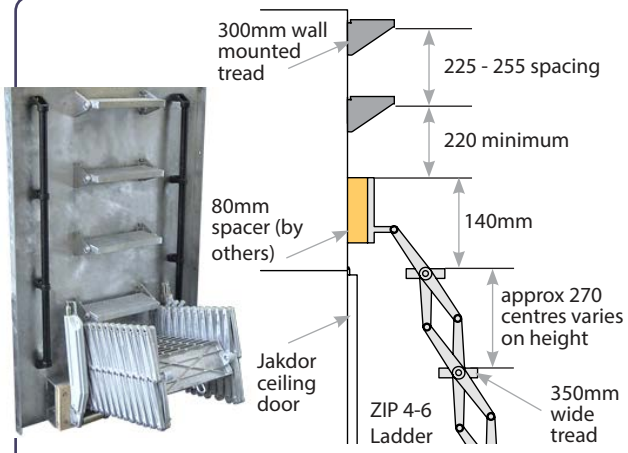

ZIP Vertical Fixed ZipRail ZWG. A safety feature where wall mounted treads are required, a vertical fixed ZipRail either side of the rungs can be offered to assist with vertical access.

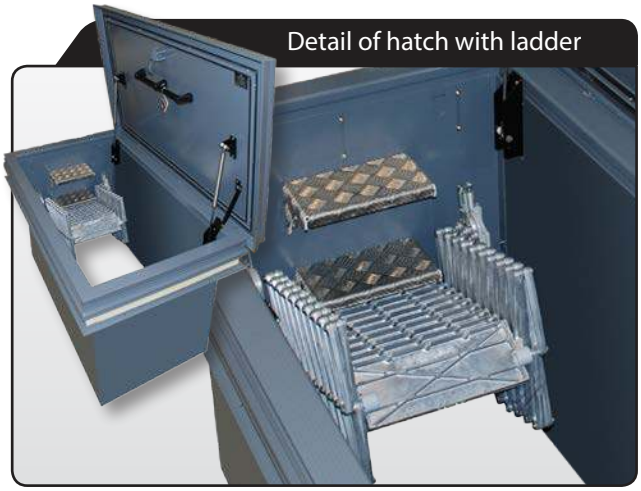

EXTENDED SKIRT WITH ZIP LADDER



EXTENDED SKIRT WITH ZIP LADDER

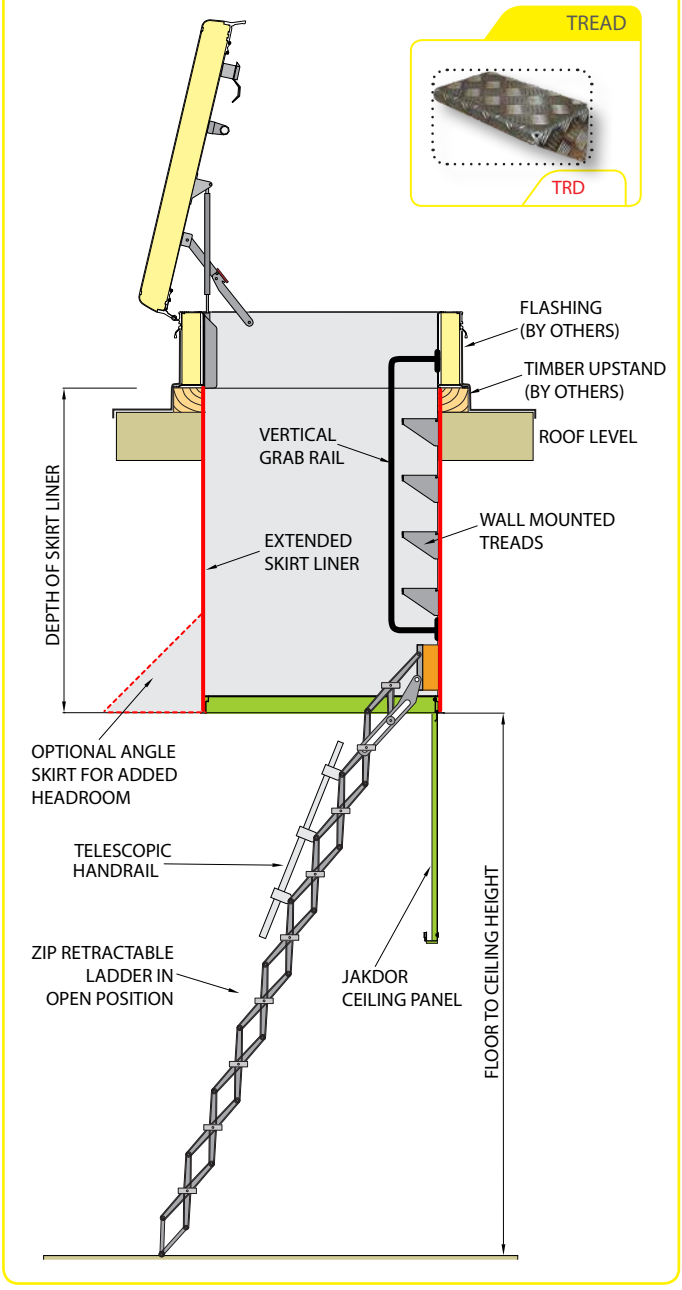

SHIPPING SPECIFICATION

Boxed ready for shipping
Size 750 (Length) x 600 (Width) x 570 (Height)
See chart on page 70 for weights

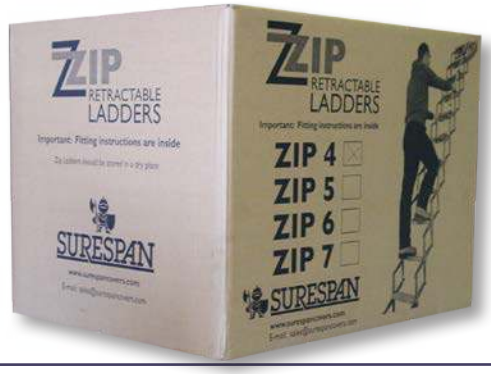





ZIP 8 WITH TRAP DOOR

Surespan ZIP 8 heavy duty retractable ladders are made to order to suit your floor to ceiling height. This unit comes complete, ready mounted to a wooden ceiling door within a 19mm thick wooden casing 240 deep, which acts as a lining for the ceiling aperture when the unit is fitted in position.

The aperture size will be determined by the height of the ladder. Options available include electrically operated, 30 and 90 minute fire rated and top operating mechanism.

ZIP 8 OPERATING DIMENSIONS

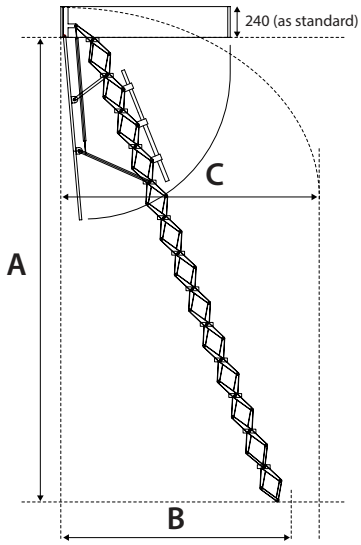

A FLOOR TO CEILING HEIGHT (mm)	B TOUCH DOWN POINT (mm)	C OPERATING SPACE (mm)
2200 - 2500	1350 - 1200	1450
2510 - 2790	1450 - 1300	1550
2800 - 3090	1550 - 1440	1650
3100 - 3390	1660 - 1540	1770
3400 - 3690	1770 - 1640	1890
3700 - 3990	1880 - 1740	2010
4000 - 4300	1980 - 1830	2030

The floor to ceiling height will determine the length of the structural opening. Contact our sales department for more details.

ZIP 8 WITH VERTICAL WALL ACCESS

ZIP8VTR VERTICAL WALL ACCESS. ZIP 8 vertical retractable ladder can be manufactured for vertical wall access and is made to order. As standard the ZIP8VTR ladder is provided ready mounted to a timber trap door and casing.







TOP OPERATING HANDLE - ZIP 8 ONLY



ZIP8 TRH TOP OPERATING HANDLE Handle and cable release system to unlock the ceiling trapdoor from above. Open and close both ceiling trapdoor and retractable ladder by pushing or pulling with operating pole.

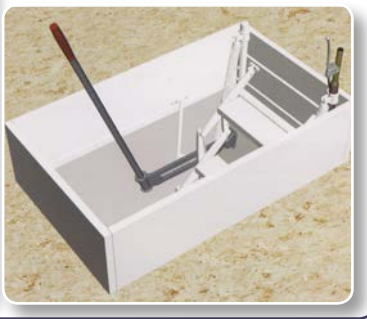

OPTIONS



Zip Wall Treads ZWT
300mm wide wall mounted tread are used within the ceiling aperture to assist with access. To be used on ZIP ladders with 350mm wide treads to ensure the first tread fits within the ladder scissor arms when in its closed position.



ZIP Vertical Fixed ZipRail ZWG
A safety feature where wall mounted treads are required, a vertical fixed ZipRail either side of the rungs can be offered to assist with vertical access.



ZIP Telescopic Handrail ZTH
Can be provided to fit on one or both sides of the zip retractable ladder for additional safety.

ZTH for one side only
ZTH2 for both sides

ZIP 8 ELECTRICALLY OPERATED



The ZIP8E Electric is made to order to suit your floor to ceiling height. Operated by a 24v DC electric drive with emergency power supply, it is operated by push button. Infra-red remote controls are available on request, enabling the retractable ladder to be opened and closed from above or below. The ladder offers automatic limit stop and safety shut down when obstacles are present. In the event of an emergency manual operation is possible. A smoke alarm warning signal and audible alarm are accessories available.

ZIP 8 LADDER WITH SRH ROOF HATCH

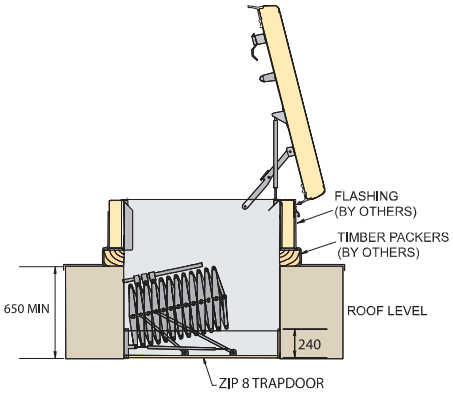

Note: Floor to ceiling height of the ladder will determine the length of the structural opening.

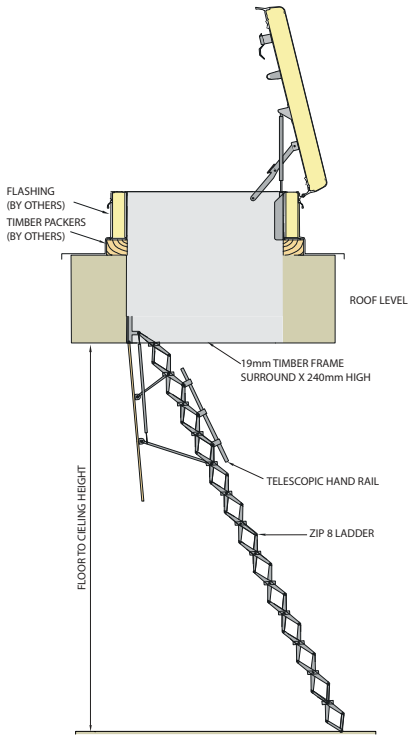

SUREGUARD

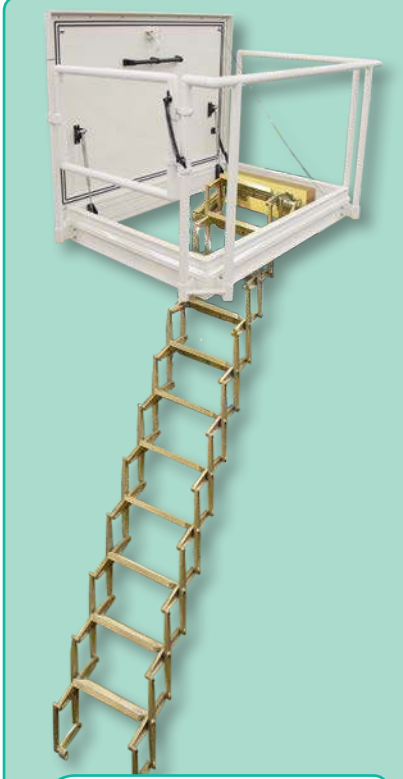

SUREGUARD SEE PAGE 62



DD Aluminium DROP**DOWN** ESCAPE LADDERS

Surespan Aluminium DropDown ladder.
In an emergency this permanently fixed ladder changes from a slim drainpipe like unit into a safe and sturdy means of escape. Just pull out the lock pin and the ladder folds out into an easy to use ladder. Suitable for different height buildings; each storey can have its own release station and lock pin, which allows the section below to be opened. In the case of a three storey building the person at the top floor can release the entire ladder while the person at the first floor can release just the section below them.

Ladder should be fitted as close to escape window as possible. A connection kit including all drill bits, fixing kits, bolts and plugs are included with each ladder. Optional electromagnectic release.

Maximum overall loading 450kg.

RELEASE STATION & LOCK PIN



Suitable for different height buildings; each storey can have its own release station and lock pin, which allows the section below to be opened. In the case of a three storey building the person at the top floor can release the entire ladder while the person at the first floor can release just the section below them.





DROP**DOWN** ESCAPE LADDERS SPECIFICATION

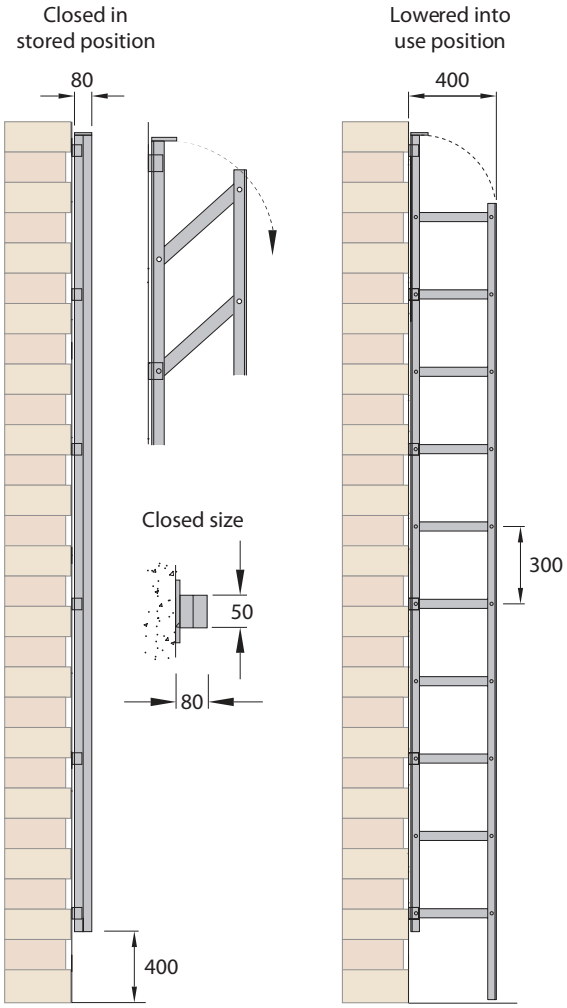

As standard the following lengths and combinations of these lengths are available: 1500, 1800 and 2700.
Any height can be accommodated.

PRODUCT Ref	SIZE
DD1	1500 High Drop**Down** ladder
DD2	1800 High Drop**Down** ladder
DD3	2700 High Drop**Down** ladder

All Drop**Down** ladders can be supplied with white outer casing (**DDW**) and key lock at bottom of ladder (**DDL**)

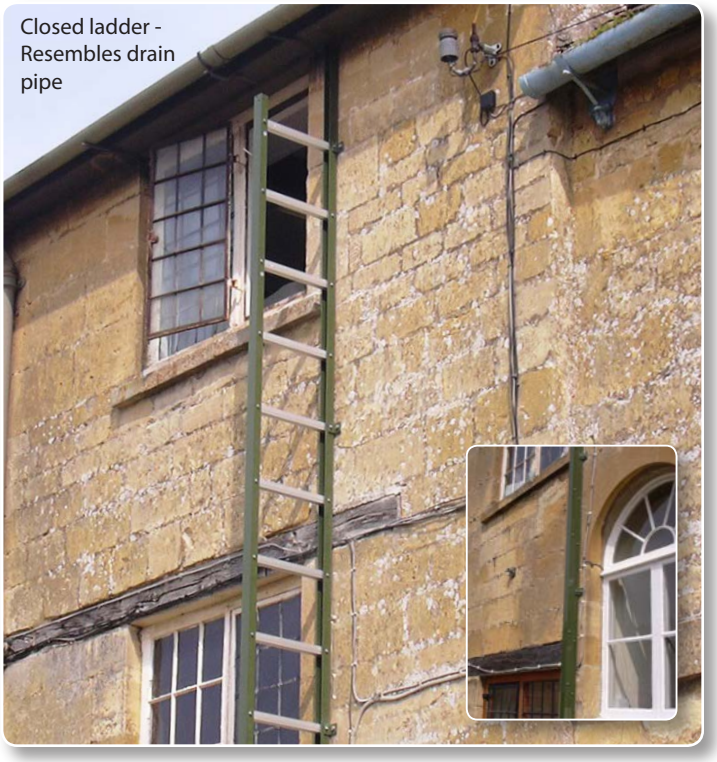





BioCote®

Proven Protection Against Bacteria

Specify in Polyester Powder Coating



BioCote is a global provider of antimicrobial additives used to protect against harmful microbes and bacteria.

BioCote antimicrobial protection is based on silver ion technology. This technology, in the form of an additive, is incorporated into products and provides continuous and durable surface protection: it does not wear off or wash away. As silver does not break down, BioCote antimicrobial additives will not leach from the surface of treated products, retaining their antimicrobial performance for the expected lifetime of the product.

Leading Antimicrobial Protection

biocote.com

BioCote antimicrobial technology is as effective in real life as it is in the laboratory. We can demonstrate a 2hr, 99% bacterial reduction rate in the lab. This performance is supported by real life studies conducted by our in-house microbiologists and detailed in peer reviewed papers.

The benefits of a BioCote protected product:

- Reduces microbe count by up to 99% within 2 hours.
- Resists growth of various types of mould and fungi.
- Protects against H1N1 and E-Coli.
- Safe and will last the expected lifetime of the product.

BioCote® is setting the industry standard for product testing and services. All products with BioCote® protection undergo extensive validation and quality control testing, ensuring they offer the highest degree of antimicrobial performance.

SURESPAN

JAKDOR ACCESS PANELS



JAKDOR

Jakdor is the market leading manufacturer of ceiling access panels. Using innovative design and high-tech production processes, we provide a full range of access panels for both internal and external use and all types of wall and ceiling finishes.

Our access hatches are provided in standard sizes or can be custom made to suit your individual needs. The access panel frame surrond enables the panel to be inserted directly into a clear structural opening and screw-fixed into position through the side of the panel frame.

Three main options are available as standard in both non-fire rated and fire rated:
- JAK.MD.PF - Combines a flush metal door with a 25mm wide picture frame.
- JAK.MD.BF - Combines a flush metal door with a concealed beaded frame.
- JAK.PB.BF - Combines a plasterboard-clad door with a concealed beaded frame for us within plasterboard wall and ceiling systems.

JAKDOR

64 JAK.MD.PF
Metal Door Access Panel with Picture Frame

64 JAK.MD.BF
Metal Door Access Panel with Beaded Frame

64 JAK.PB.BF
Plasterboard Door Access Panel with Beaded Frame

65 JAK.MD.PF/FR
Fire Rated Metal Door Access Panel with Picture Frame

65 JAK.MD.BF/FR
Fire Rated Metal Door Access Panel with Beaded Frame

65 JAK.PB.BF/FR
Fire Rated Plasterboard Door Access Panel with Beaded Frame















JAKDOR PANELS

STANDARD METAL DOOR & PICTURE FRAME — CAD/WAP.C

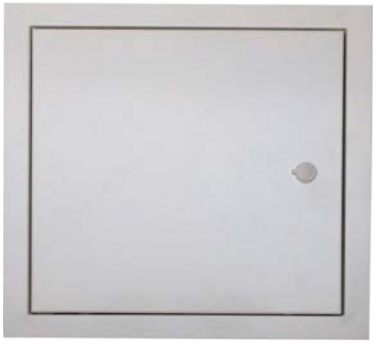

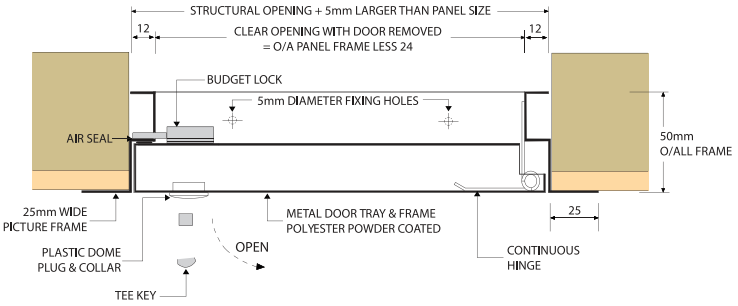

STANDARD METAL DOOR & CONCEALED BEADED FRAME — CAD/WAP.B



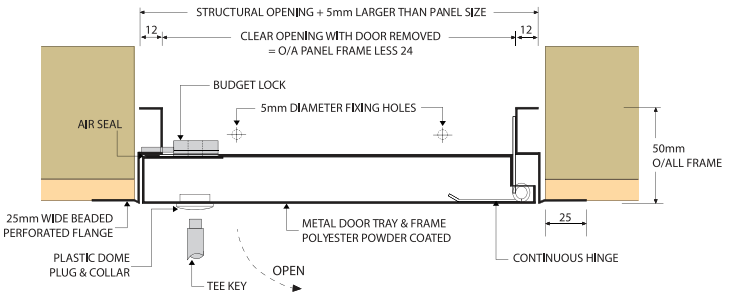

STANDARD PLASTERBOARD DOOR & CONCEALED BEADED FRAME — CAD/WAP.A



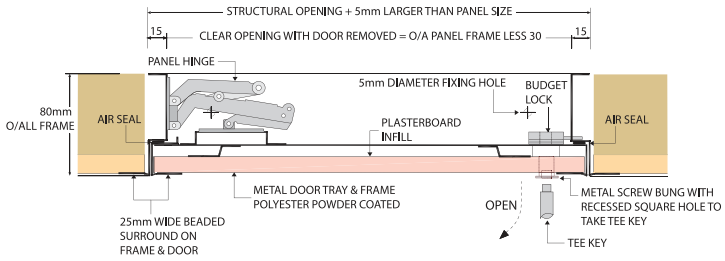

DIMENSIONS

SIZES			STRUCTURAL OPENING		
300	x	300	305	x	305
450	x	450	455	x	455
550	x	550	555	x	555
600	x	600	605	x	605
600	x	900	605	x	905
600	x	1200	605	x	1205

STANDARD LOCKING OPTIONS



*Budget lock standard



*Three - way locking



Quarter turn lock



Key lock



Tamper-proof lock



Touch catch

* Only locking options available in JAK.PB.BF

FIRE RATED METAL DOOR & PICTURE FRAME — CAD/WAP.C/FR60/120



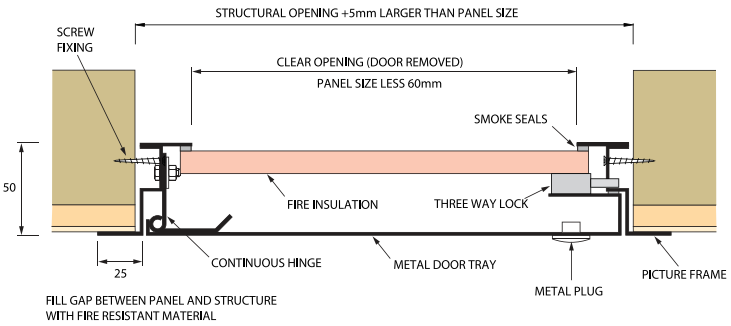

FIRE RATED METAL DOOR & CONCEALED BEADED FRAME — CAD/WAP.B/FR60/120



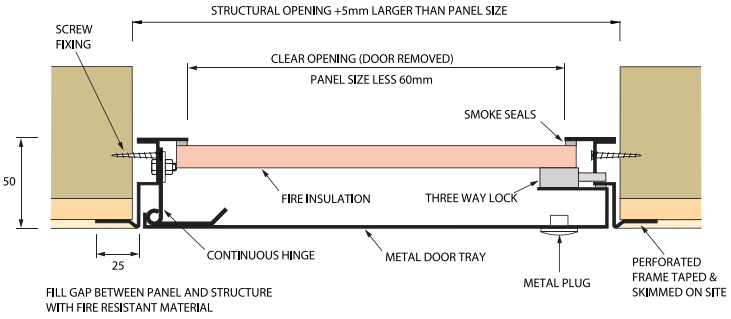

FIRE RATED PLASTERBOARD DOOR & CONCEALED BEADED FRAME — CAD/WAP.A/FR60/120

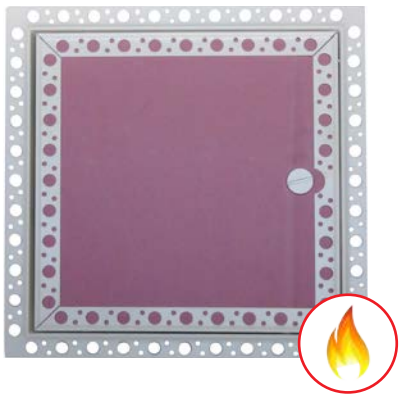

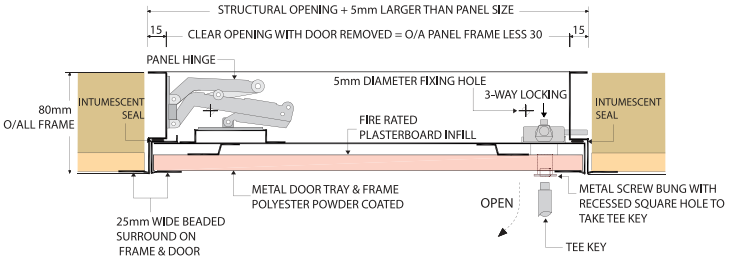

DIMENSIONS

SIZES			STRUCTURAL OPENING		
300	x	300	305	x	305
450	x	450	455	x	455
550	x	550	555	x	555
600	x	600	605	x	605
600	x	900	605	x	905
600	x	1200	605	x	1205

FIRE RATED LOCKING OPTIONS



*Three - way locking



Key lock



Tamper-proof lock

* Plasterboard Door Beaded Frame is only available with this locking option

PROJECTS

INTERNATIONAL PROJECT REFERENCE LIST

Surespan is recognised globally as the world's leading manufacturer of bespoke assist-lift access covers and roof hatches.
Listed below are some projects where Surespan access products have been installed.
These installations have been supported by an extensive global distribution network of experienced trade partners.

Europe - United Kingdom & Ireland

Devonport Dockyard Plymouth Naval Base
Millenium Harbour Project
London Victoria Station
Stratford Railway Station
Royal Glamorgan Hospital
Merryhill Shopping Centre
Royal College of Music
Docklands Light Railway
Palace of Westminster
Paddington Station
Kings Cross Underground
Zeneca Pharmaceutical
Sellafield Nuclear Facility
The British Museum
Victoria & Albert Museum
The Bristol Planetarium
Heathrow Airport T5
TAG McLaren Head Quarter Building
Kielder Observatory
Scottish Enterprise HQ Athletes' Village
University of West England
St. Bart's Hospital
Manchester Stadium
Dublin Zoo Dublin Airport
Liffey Tunnel, Dublin
Dublin Dental Hospital
Lisdoonvarna Waste Water Treatment Works
Clara Visitors Centre
Blanchardstown Shopping Centre
Galway Racecourse
RIAM (Academy of Music)
Various Crossrail Stations, London

Europe - Other

Sporting D'Hiver, France
Athens Metro, Greece
Greece National Gardens, Greece
Omonia Stadium, Greece
Greece Ergo Bank
Greece Metro Peristeri
Greece Metro Station Porto,
Portugal Retail Park Portimao, Portugal
E S Dominigos Sequeira, Portugal
Escola Das Taipas, Portugal
Refugios Almeria, Spain
Metro Porto, Spain

Middle East

Presidential Palace, Abu Dhabi
Ferrari World, Abu Dhabi
Msheireb Downtown Doha (Phase 1B),
Qatar Msheireb Downtown Doha (Phase 1C),
Qatar Msheireb Downtown Doha (Phase 2), Qatar
Al Wadi Accor Hotel (Msheireb Downtown Doha (Phase 2)), Qatar
Staff Access Control Facility – NDIA, Qatar
Msherireb – Heritage Quarter Houses
Qatar JK1 Cultural Forum, Qatar
Kahramaa Awarness Park, Qatar
QPD District, Qatar
Sidra Medical & Research Centre, Qatar
Khalifa Stadium, Qatar
Viva Bahriya, The Pearl, Qatar
GTC 626 Packages A, B & C – Mega Reservoir Qatar
Plot Bu Thelah Farm, Qatar
Al Raffa Villa & Majilis, Qatar
Salwa Resort, Qatar
Lusail Expressway, Qatar
Admak Trip 65A, Highway Project, Abu Dhabi
ADSS Contract, Abu Dhabi
Zayed School, Abu Dhabi Delma
Sewerage Scheme, Abu Dhabi
Al Ain, Abu Dhabi
Ghavathi Sewerage Scheme, Abu Dhabi
Al Zeina Project, Abu Dhabi
Al Wathba, Abu Dhabi
Saadiyat Island Development, Abu Dhabi
Al Naboodah Showroom, Abu Dhabi
IKEA Yas Island, Abu Dhabi
Dubai Power Generation Area, Dubai
Dubai International Airport,
Dubai Palace Conference Hotel,
Dubai IKEA Dubai Festival City, Dubai
Burj Tower, Dubai
Burj Dubai Underground Car Park,
Dubai Red Line Entrance, JT Metro
Dubai Maydan Hotel, Dubai
Burj Dubai Children's Pavilion, Dubai
Dubai Metro Airport,
Dubai Airport Hotel,
UAE Kindergarten School,
Dubai Rosewood Hotel, UAE
Zayed University, UAE
Al Bateen Tower 1, UAE
Al Bustan Project, UAE
Central Market, Abu Dhabi, UAE
DOT, Abu Dhabi, UAE
Yas Water Park, Abu Dhabi, UAE
MPS-5 Project, Al Ain, UAE
Sewerage Project, Yas Island, Abu Dhabi,
UAE ADMA-OPCO Project, Abu Dhabi,
Ismail Bin Ali Building, Qatar
Nakilat Shipyard, Qatar
Riyadh Dryport Saudi
ArabiaS heik Yasser Villa, Saudi Arabia
Jeddah Control Tower, Saudi Arabia
Makkah-Madina Expressway, Saudi Arabia
Al Mannar Residential Complex,Beneedal Gar,Kuwait
Sharq Waterfront Project, Kuwait

Australasia

Port Hedland Port Authority,
Australia Laser Hatches Project, Australia
Sydney Light Railway

Asia

Kai Tak Estates, Hong Kong
601 MTR Hang Hau Station, Hong Kong
Police Headquarters, Hong Kong
Mei Foo Station, Hong Kong
Stanley Beach, Hong Kong Macau
Fisherman Wharf, Hong Kong
Hong Kong Science Park,
Hong Kong Butterfly Valley, Hong Kong
Kapichira Hydro Electric Power,
Malawi Yun Lin Technology University, Taiwan

Gay-Woen, Taiwan

Central & South America

Commonwealth of Dominica, Dominican Republic
Dominica Financial Centre, Dominican Republic

Other International Markets

Halley VI, Antarctica

United States & Canada

Yale University, New Haven
Yonkers, New York Sun Coast RV, Florida
Biomass Pit Doors, Yves Lavoie, Canada
United Dairy Farm, USA
Innovative Commercial, USA
Moreland Village, Palmeto Bluff








© SURESPAN 2018 Rev. 3

www.surespancovers.com

ISO 9001:2015 FM23434

Protected by BioCote Advanced surface hygiene

Surespan access covers are now available with a BioCote finish. BioCote is a specially formulated powder coating, with all the attributes of conventional powders plus the ability to inhibit the growth of fungi and bacteria that contact the surface. www.biocote.com

In the interest of continued improvement Surespan reserve the right to modify any product or specification without prior notice.

Surespan Ltd. hold a number of British and International patents. It is company policy to defend our intellectual property rights.

This brochure is dedicated to the memory of Derek Pearce, Technical Director, who is sadly missed by all at Surespan.

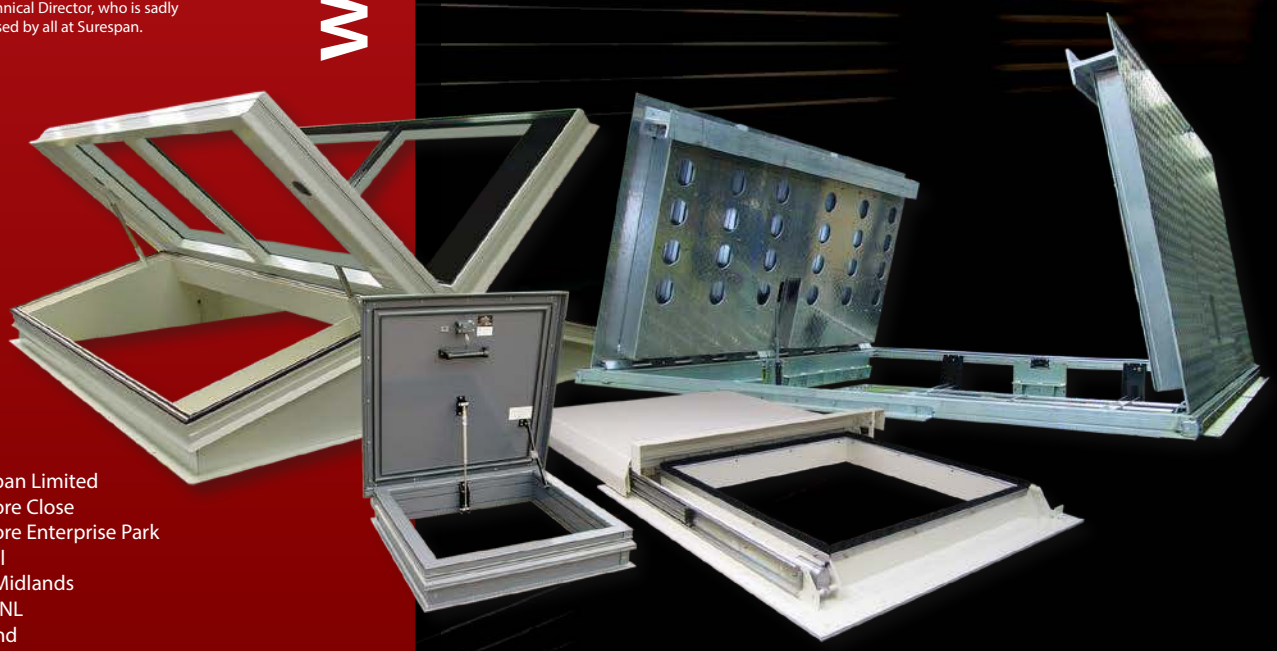

Surespan Limited
Leamore Close
Leamore Enterprise Park
Walsall
West Midlands
WS2 7NL
England

Tel: +44 (0)1922 711185
Fax: +44 (0)1922 497943
E-mail: sales@surespancovers.com
Web: www.surespancovers.com

SURESPAN

National Association of Rooflight Manufacturers

THE NATIONAL FEDERATION OF ROOFING CONTRACTORS LIMITED